stryker

T2® ICF

Intramedullary nailing system

Operative technique

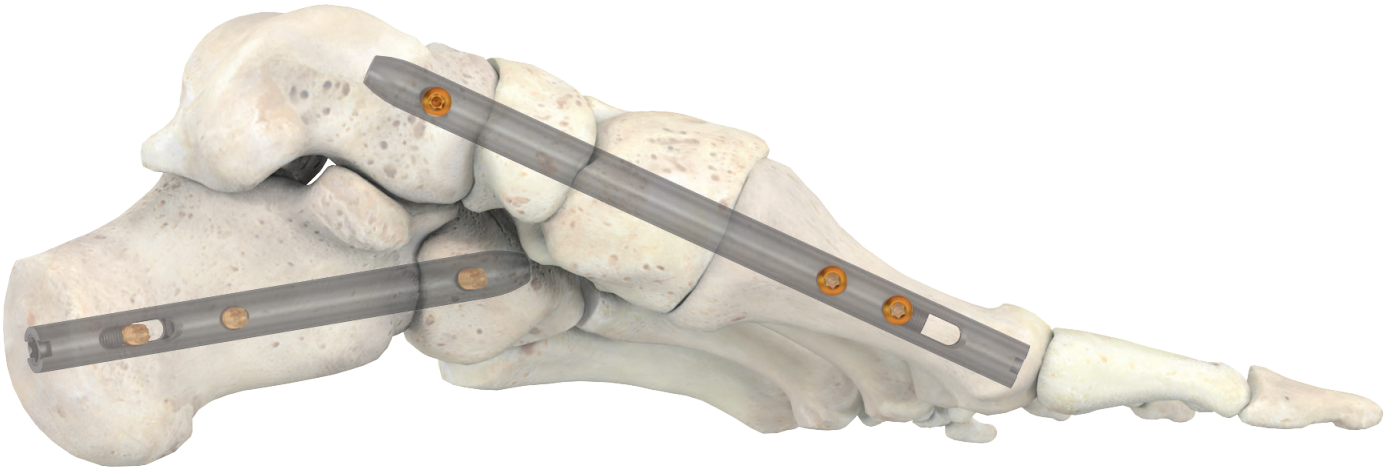

T2 ICF system

Indications and contraindications 4

MRI safety information 5

Technical details 6

Operative technique – procedural steps when stabilizing both columns 11

Operative technique – medial column procedure . . . 13

- Preoperative planning 13
- Patient positioning 13
- Joint surface preparation 13
- Incision 14
- Entry point 14
- Implantation 15
  - Guide wire insertion 15
  - Guide wire targeter assembly / disassembly 16
  - Estimation of nail length 18
  - Bone plug extraction (optional) 20
  - Drilling / Reaming 21
  - Notch information 23
  - Targeting device and nail assembly 24
  - Nail Insertion 28
  - Reference screw insertion 29
  - Screw insertion in case of compression . . 33
    - Final screw insertion (if compression was applied) 35
  - Screw insertion without compression . . . 36
    - Final screw insertion (if no compression was applied) . . . 37
- Disassembly of targeting arm and end cap insertion 39
- Bone plug repositioning (optional) 40

Operative technique – lateral column procedure . . . 41

- Preoperative planning 41
- Patient positioning 41
- Joint surface preparation 41
- Incision 41
- Implantation 42
  - Guide wire insertion 42
  - Estimation of nail length 43
  - Drilling / Reaming 44
  - Targeting device assembly 46
  - Nail Insertion 46
  - Reference screw insertion 47
  - Screw insertion in case of compression . . 51
    - Final screw insertion (if compression was applied) 53
  - Screw insertion without compression . . . 54
    - Final screw insertion (if no compression was applied) . . . 55
- Disassembly of targeting arm and end cap insertion 57

Addendum, medial column procedure 60

- Implant removal (optional) 61

Addendum, lateral column procedure 63

- Implant removal (optional) 63

T2 ICF system

Rx ONLY

This publication sets forth detailed recommended procedures for using Stryker devices and instruments.

It offers guidance that you should need, but, as with any such technical guide, each surgeon must consider the particular needs of each patient and make appropriate adjustments when and as required.

A workshop training is recommended prior to performing your first surgery. All non-sterile devices must be cleaned and sterilized before use.

Follow the instructions provided in our cleaning and sterilization guide (OT-RG-1). Multi- component instruments must be disassembled for cleaning. Please refer to the corresponding assembly/disassembly instructions.

Please remember that the compatibility of different product systems has not been tested unless specified otherwise in the product labeling.

See package insert (Instruction for Use) (V15208, V15247, V15011, V15013 and L220105B6) for a complete list of potential adverse effects, contraindications, warnings and precautions. The surgeon must discuss all relevant risks including the finite lifetime of the device with the patient when necessary.

Indications and Contraindications

Indications

The T2 ICF System is indicated for internal bone fixation of the foot for the following conditions and procedures:

- Neuropathic osteoarthropathy (Charcot).
- Fracture fixation.
- Osteotomies.
- Non-unions.
- Mal-unions.
- Fusions.

Contraindications

The physician's education, training and professional judgment must be relied upon to choose the most appropriate device and treatment. Conditions presenting an increased risk of failure include:

- Any active or suspected latent infection or marked local inflammation in or about the affected area.
- Compromised vascularity that would inhibit adequate blood supply to the fracture or the operative site.
- Bone stock compromised by disease, infection or prior implantation that cannot provide adequate support and / or fixation of the devices.
- Material sensitivity documented or suspected.
- Weight bearing prior to bony consolidation can produce loads on the implant that may lead to failure of the fixation of the device, failure of the bone union and / or failure of the device itself.
- Patients having inadequate tissue coverage over the operative site.
- Implant utilization that would interfere with anatomical structures or physiological performance.
- Any mental or neuromuscular disorder which would create an unacceptable risk of fixation failure or complication in postoperative care.
- Other medical or surgical conditions which would preclude the potential benefit of surgery.

MRI safety information

Non-clinical testing has demonstrated the T2 ICF System is MR Conditional. A patient with this device can be safely scanned in an MR system meeting the following conditions:

- Static magnetic field of 1.5 T or 3.0 T.
- Maximum spatial field gradient of 3000 gauss/cm (30 T/m).
- Maximum MR system reported, whole body averaged specific absorption rate (SAR) of 1.0 W/kg.

Under the scan conditions defined above, the T2 ICF System is expected to produce a maximum temperature rise of less than 5.1°C after 15 minutes of continuous scanning. In non-clinical testing, the image artifact caused by the device extends approximately 28.5mm from the T2 ICF System when imaged with a gradient echo pulse sequence and a 1.5 T MRI system.

WARNING

The MRI safety information provided is based on testing which did not include supplementary devices. If there are supplementary devices (i.e. plates, screws, wires, etc.) present in proximity to the T2 ICF system, this could result in additional MRI effects and the information provided above may not apply.

Technical details

Nail with compression screw

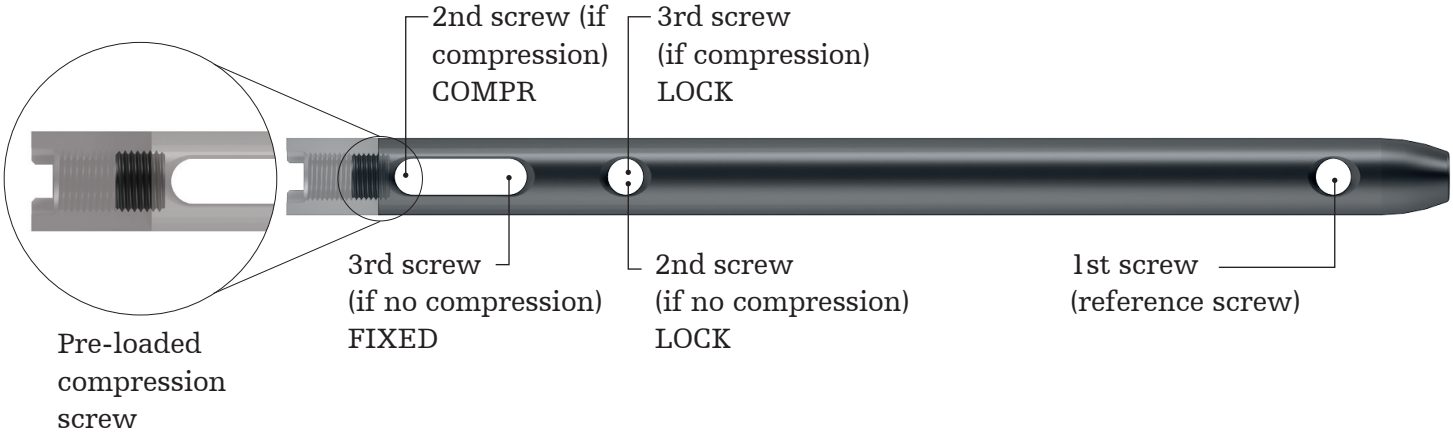

Nail diameters: 8.0, 9.0, and 10.0mm

Nail lengths: 80, 90, 100, 110, 120, 130, and 140mm

Note: the 1st screw (reference screw) is the guiding landmark for the whole operation; it is located 12mm from the tip of the nail.

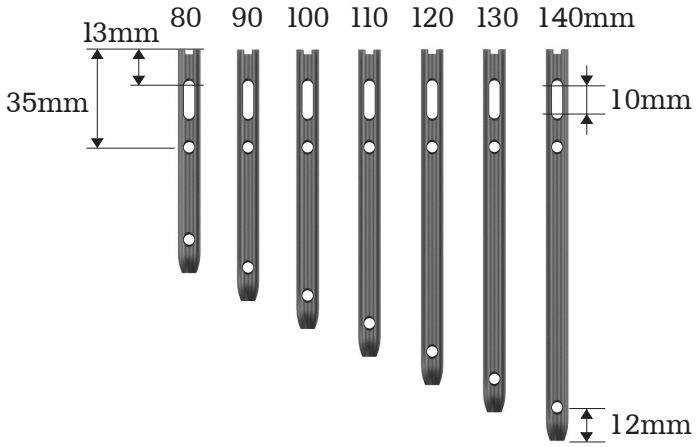

End caps

End cap diameters: 8.0, 9.0, and 10.0mm

End cap lengths: Standard, 5, 10, 15, and 20mm

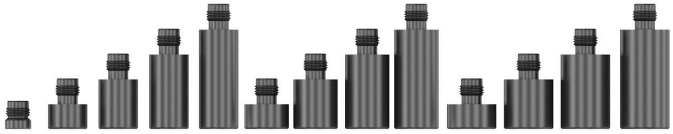

VariAx 2 Bone Screws (T10)*

Screw sizes: 3.5mm (VariAx 2)

Screw lengths: 12 to 50mm (2mm increments);
50 to 70mm (5mm increments)

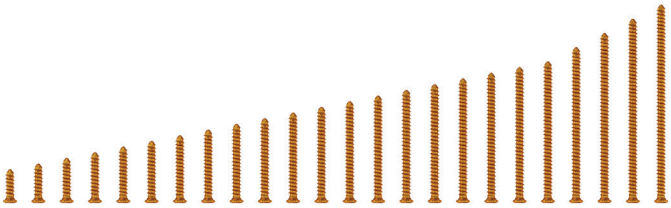

*Existing bone screw of the VariAx 2 system

Technical details

Kirschner wire (threaded / unthreaded*)

- To be positioned so that tip is initially at desired location of reference screw to allow for estimation of nail length.

Guide wire targeter

- Assists during the insertion of the guide wire by allowing visualization of the entry and exit points of the guide wire before it is inserted.
- Consists of four components: arm, shuttle, sleeve, and crown.
- The guide wire targeter arm is radiolucent.

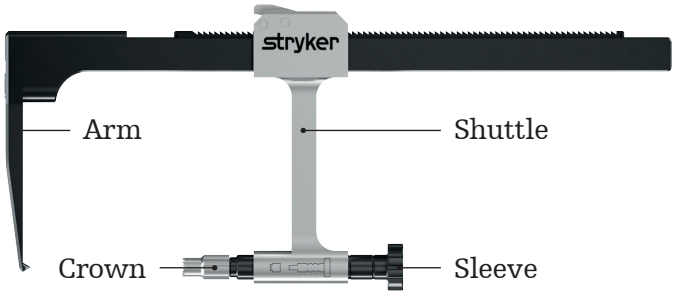

Guide wire ruler

- Provides an estimate of the required nail length; however, final decision regarding nail length and diameter to be made during reaming.
- Provides an estimate of the required end cap length.

Front

Back

Crown drill

- Used to cut the periphery of the bone plug.
- A hard stop at 10mm insertion depth is available; hard stop is complemented with a marking for better visualization during the drilling process.
- Reaming shall be stopped before laser marking and not with the hard stop.

⚠ CAUTION

Do not use the crown drill in lateral column to avoid soft tissue damage.

*Existing kirschner wire of the Stryker Plating System (SPS)

Technical details

Bone plug extractor

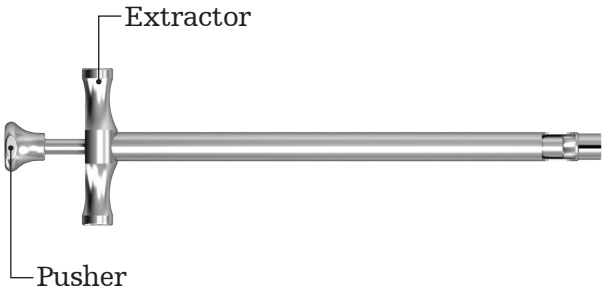

- Used to extract, store and replace the bone plug, in combination with the bone plug pusher.
- Extractor to be hammered straight into the bone during insertion without rotation; rotational movement may destroy the plug and hinder extraction.
- Pusher to be inserted into extractor to eject bone plug.

Opening drill

- Opening drill Diameter: 5.5mm.
- Used to open all cortices of the bones to fuse and prepare the way for the reamers.
- Features a tip notch that is used to visualize the intended position of the reference screw; notch is visible under fluoroscopy (further information on page 23).
- Modified Trinkle Connection.

Reamers

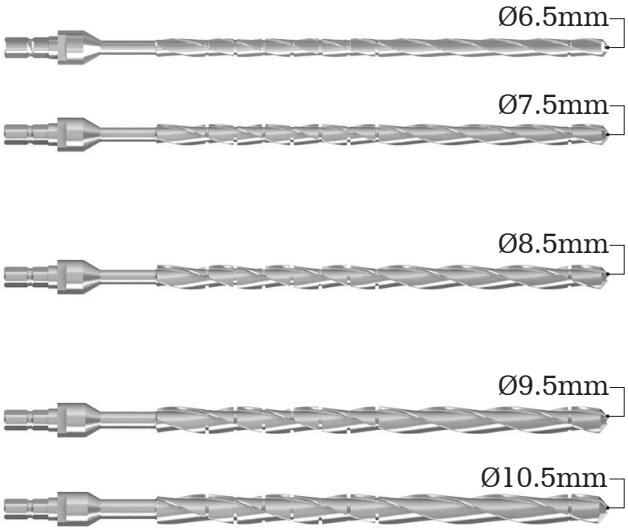

- Reamer Diameter: 6.5, 7.5, 8.5, 9.5, and 10.5mm.
- The 6.5 and 7.5mm reamers are used to gradually open the hole diameter up to diameter needed to implant the nail.
- The 8.5, 9.5 and 10.5mm reamers correspond to nail diameters of 8mm, 9mm, and 10mm, respectively.
- Features a tip notch that is used to visualize the intended position of the reference screw; also features additional notches that are used to determine adequate nail length; notches are visible under fluoroscopy (further information on page 23).
- Modified Trinkle Connection.

Guide wire pusher

- Helps to avoid pulling out the guide wire accidentally when removing the opening drill or the reamers.

Technical details

Targeting device

- Allows for insertion of nail and screws. It is radiolucent, which helps visualize the nail during insertion.

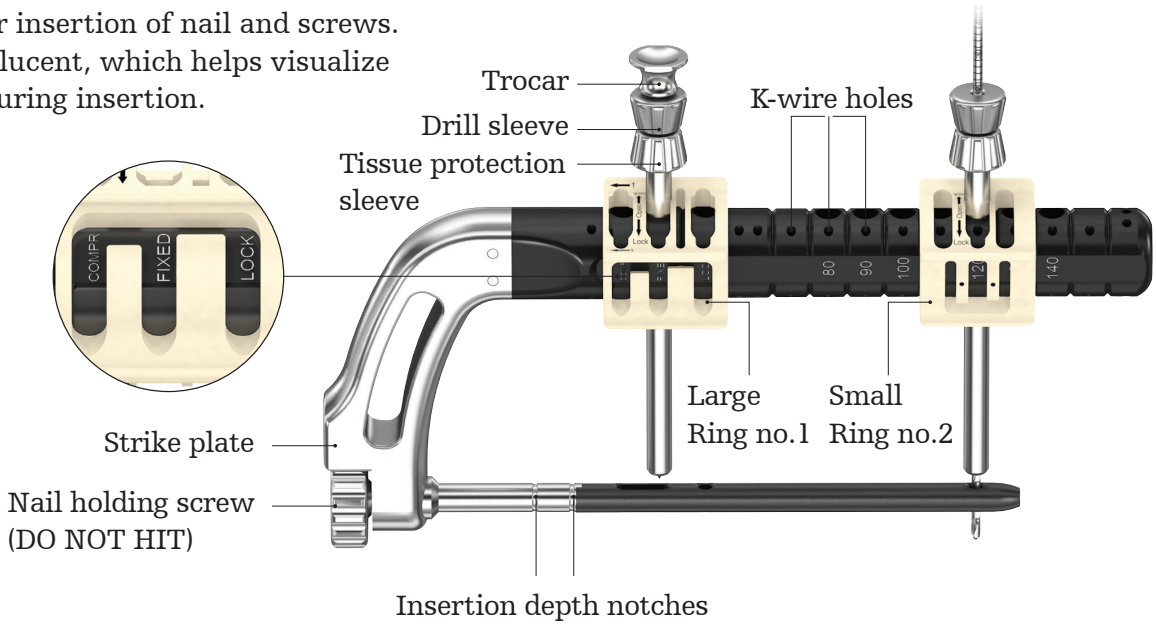

Nail holding screw

- Can be pre-threaded into the targeting arm to prevent it from falling out unexpectedly.

⚠ CAUTION

The nail holding screw must not be hit at any time during the operation.

Rings

- Two rings are assembled on the arm to ensure locking of the sleeve system on the targeting device; Ring No.1 is assembled first.

K-wire holes

- Shall be used to add stability to the construct during screw insertion and locking; they prevent rotation of the targeting device after the first hole is drilled and before the first screw is inserted.

Nail insertion depth notches

- Provide a visual aid of the location of the nail end and of the required over-insertion needed to guarantee a full (10mm) compression capacity.

Strike plate

- If required, gentle hammering is allowed on the strike plate; care must be taken not to hammer on the nail holding screw.

Sleeve system (made up of three parts)

- The trocar helps during the insertion of the sleeve system through soft tissue; it also works as an indicator. A gap between the sleeves and the trocar indicates that the sleeves are in contact with the bone.

The sleeve system is made up of:

- Trocar.
- Drill sleeve.
- Tissue protection sleeve.

Screw depth gauge

- Used to measure the required screw length through tissue protection sleeve.

Technical details

VariAx 2 Medium Handle and Inserts*

- Medium handle that can be interchanged with either a bi-directional ratcheting AO-coupling insert or a standard AO-coupling insert.
- The Medium modular handle is equipped with a spin-cap to allow insertion using a two-finger technique. In order to disengage the insert from the handle, push down on the button on the distal part of the handle and pull the insert away from the handle.

Medium handle

Handle insert, AO ratchet, cannulated

Handle insert, AO, cannulated

⚠ WARNING

The inserts must be removed from the handles before cleaning.

The bi-directional ratcheting insert can work in three modes: clockwise ratcheting, counter-clockwise ratcheting or neutral. To switch between the different modes, simply twist the distal part of the insert to the desired driving direction.

NOTICE

To ensure appropriate ratcheting function, perform appropriate maintenance on the insert by applying medical grade lubricant oil through the marked cut-outs.

Screwdriver Blade, AO, T10

- The Screwdriver Blade, AO, T10 provides a self-retaining connection to the screw. To avoid disengagement of the screwdriver blade from the screw during insertion, axial pressure is recommended.
- The screwdriver is marked with a line that indicates when the screw head is in contact with the cortex.
- The laser marking on the screwdriver will be flush with the end of the tissue protection sleeve when the screw is fully seated.

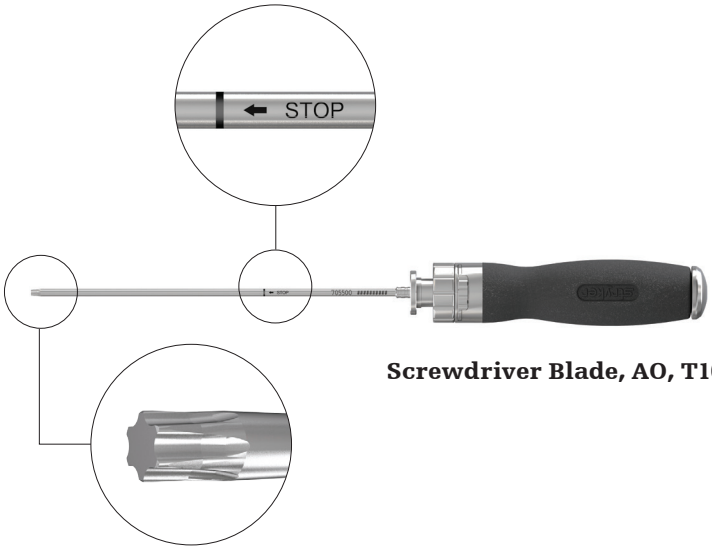

Screwdriver Blade, AO, T10

*Existing handle and insert of the VariAx 2 System

Operative technique

Procedural steps when stabilizing both columns

When performing both the medial and lateral column procedures, it is recommended to follow the below steps:

Step 1:

Insert the guide wire on the medial side. Please refer to pages 13-19 for detailed procedural steps.

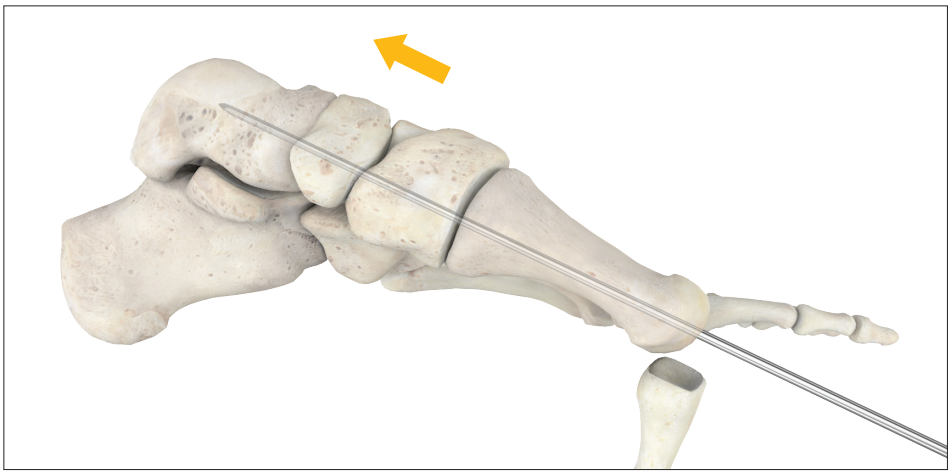

Guide wire insertion – medial column

Step 2:

Insert the guide wire on the lateral side. Please refer to pages 41-43 for detailed procedural steps.

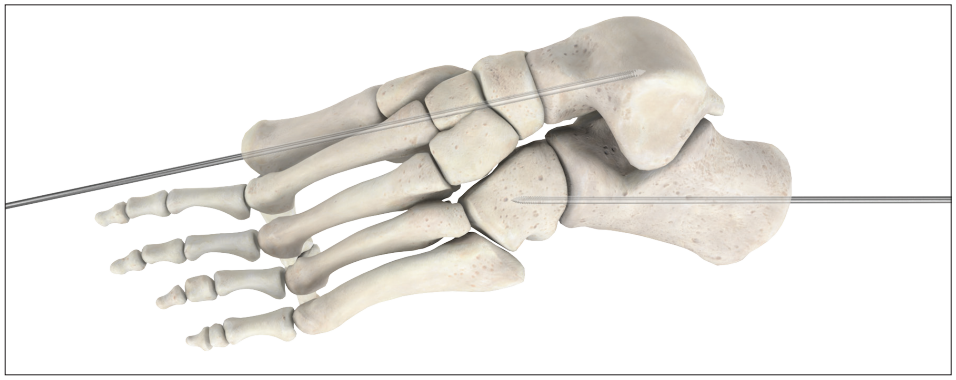

Guide wire insertion – lateral column

Operative technique

Procedural steps when stabilizing both columns

Step 3:

Insert the nail in the lateral column. Please refer to pages 44-58 for detailed procedural steps.

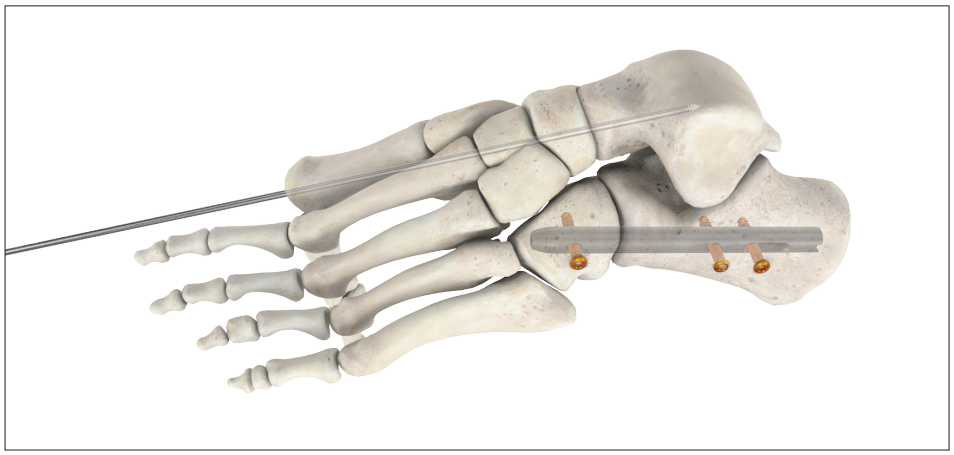

Nail insertion – lateral column

Step 4:

Insert the medial nail. Please refer to pages 20-40 for detailed procedural steps.

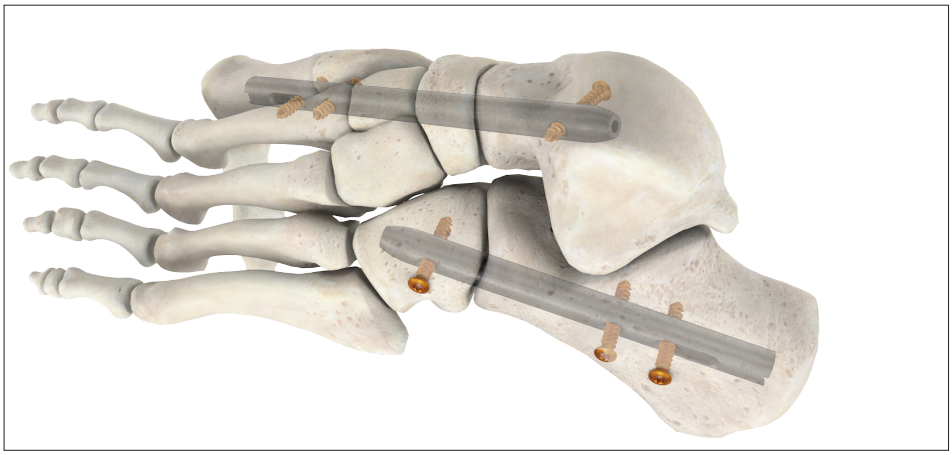

Nail insertion – medial column

Operative technique
Medial column procedure

Preoperative planning

Thorough evaluation of pre-operative radiographs of the affected extremity is critical. The surgeon should consider the apposition/compression feature of the T2 ICF nail prior to determining the length of the implant. If apposition/compression is planned, the nail should be 15mm to 20mm shorter than the measured length. Up to 10mm of active apposition / compression is possible.

⚠ WARNING

- **In the presence of an ankle equinus, secondary to a gastrocnemius / soleus or isolated gastrocnemius muscle contracture, a lengthening procedure should be contemplated to reduce the compensatory strain effect on the midfoot.**
- **The implants are designed to support bony fusion. In the absence of fusion early implant breakage may occur due to overload.**
- **The smallest offered nail diameter is 8.0 mm. The bones (especially the metatarsal) of the patient must be large enough to allow a corresponding reaming up to a diameter of 8.5mm.**

Patient positioning

Patient positioning is surgeon dependent. It is recommended to place the patient in the supine position (with leg bump) on a radiolucent table. Care should be taken to assure neutral alignment of foot and ankle.

Patient positioning

Joint surface preparation

Prepare all the joints for fusion and correct deformities as necessary. Joint preparation and appropriate alignment of both columns (if applicable) should be done before any nail is inserted.

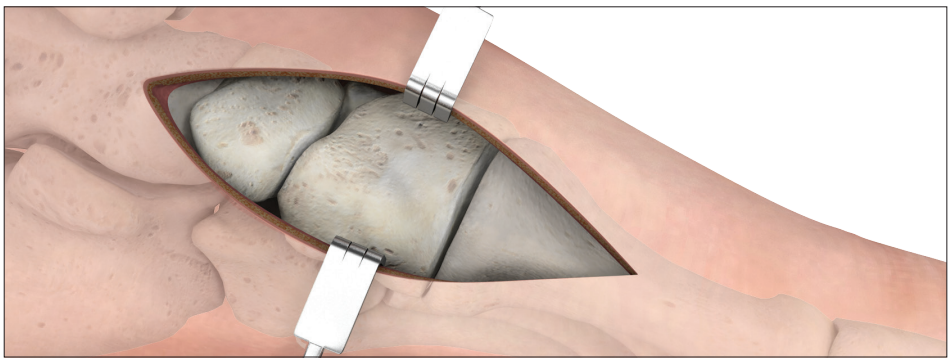

Example medial incision

Operative technique
Medial column procedure

⚠ WARNING

Do not insert the nail in the medial column using antegrade approach.

Incision

With sharp dissection, make a dorsal approach over the 1st metatarsal phalangeal joint (MTP) just medial to the extensor longus tendon.

Perform a longitudinal incision of the dorsal capsule down to the bone to expose the joint. The medial and lateral collaterals should be released sufficiently to allow plantar flexion of the proximal phalanx and expose the central articular surface of the first metatarsal head.

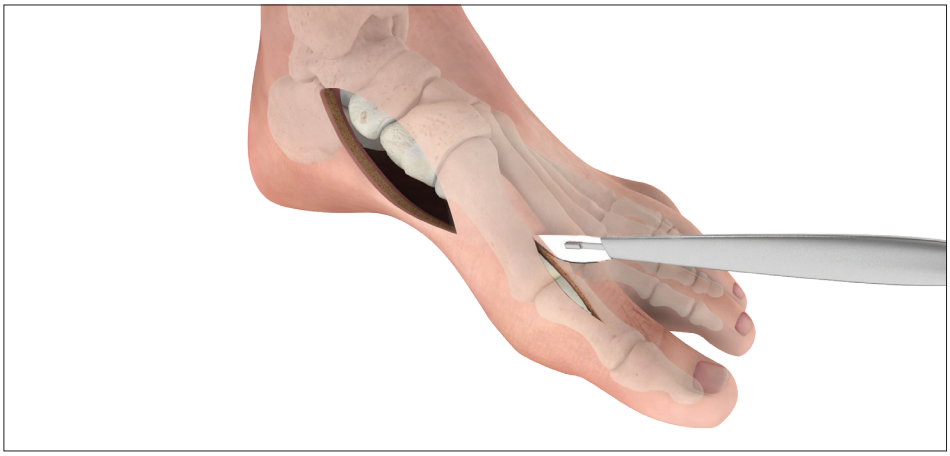

Dorsal incision

Entry point

Access the first metatarsal head through the dorsal incision.

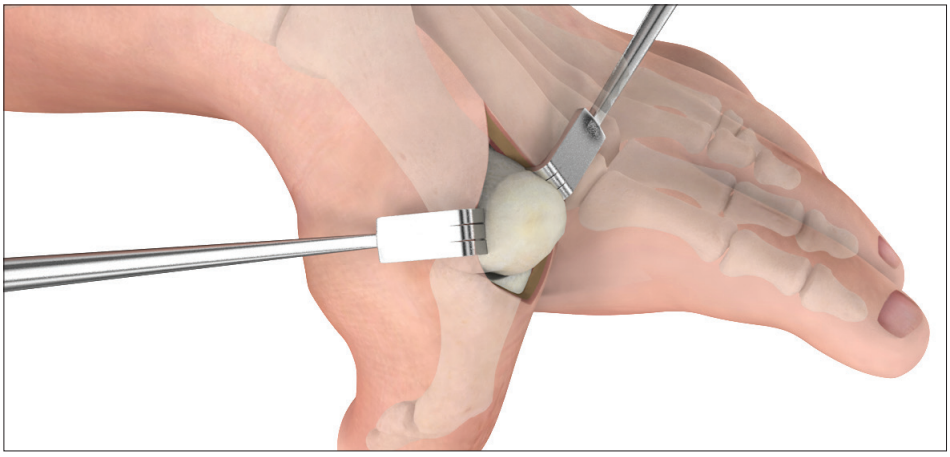

Entry point to first metatarsal

Operative technique
Medial column procedure

Implantation

Guide wire insertion

Using fluoroscopic guidance, insert the 285mm guide wire slightly above the center of the first metatarsal head in order for the wire to follow the true intramedullary canal of the bone.

The guide wire targeter is used to allow the visualization of the entry and exit points of the guide wire. Using the coarse and fine tuning options, the guide wire targeter can be clamped on the bone and imaged using fluoroscopy to define the appropriate position of the guide wire.

Guide wire targeter

⚠ CAUTION

Position the guide wire targeter on the bone to define the correct guide wire trajectory.

Operative technique
Medial column procedure

Guide wire targeter assembly

1) Slide the shuttle on the arm

Note: a marking on the shuttle indicates the direction of insertion.

2) Screw the sleeve into the shuttle until the sleeve is positioned at neutral position

3) Screw the crown on the sleeve

Shuttle attachment on arm

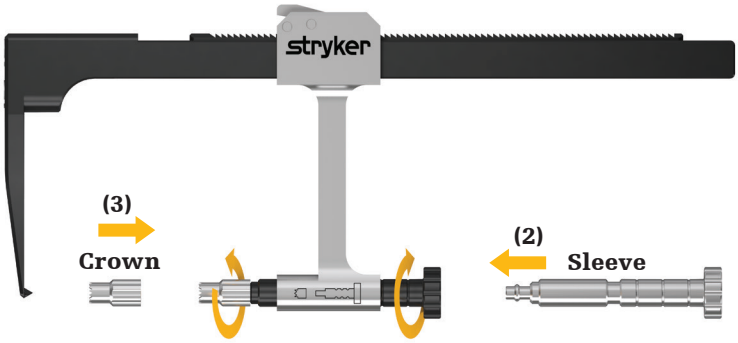

Sleeve attachment onto shuttle / crown attachment onto sleeve

Neutral Position

Guide wire targeter disassembly

1) Unscrew the crown from the sleeve

2) Unscrew the sleeve from the shuttle

3) Remove the shuttle from the arm by pushing the button on the shuttle

⚠ WARNING

Prior to cleaning/sterilization, follow the above mentioned disassembly instructions to avoid contamination of the surgical wound due to insufficient cleaning / sterilization of guide wire targeter cavities.

Operative technique
Medial column procedure

According to surgeon preferences and the patient's pathology (e.g. relatively intact anatomy of the tarsometatarsal joint), the targeter could be used to target over several bones, for example bridging over the first metatarsal and first cuneiform or the first metatarsal to the talonavicular joint. As each bone of the medial column is approached, care must be taken to ensure the appropriate medial column alignment desired for final foot position. It is the placement of the guide wire that determines the final medial column contour.

The guide wire targeter has an offset in order to compensate the arching of the arm during compression.

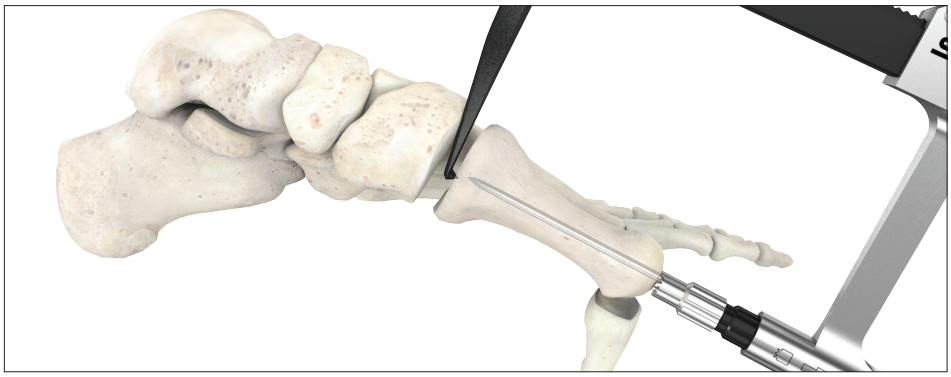

Guide wire targeter and guide wire insertion

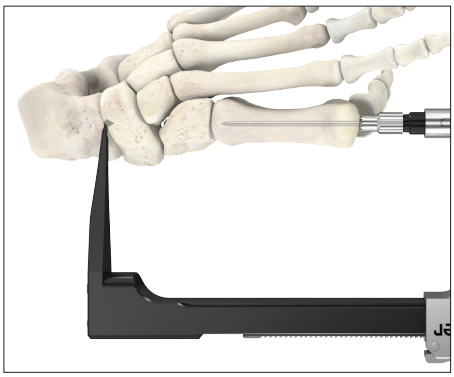

Guide wire targeter and guide wire insertion

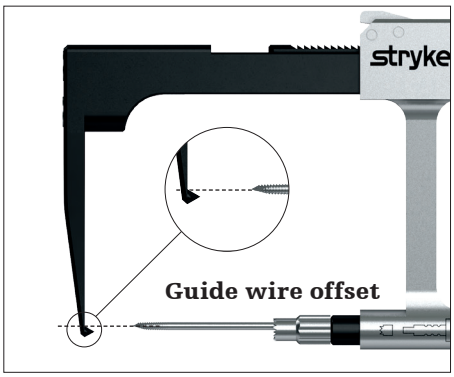

Guide wire offset

⚠ WARNING

Insertion of the guide wire must be performed under fluoroscopic control in order to guarantee the adequate centering and tip positioning in the bone.

⚠ CAUTION

The tip of the guide wire must be placed at the desired location of the reference screw in order to estimate the nail length correctly with the guide wire ruler.

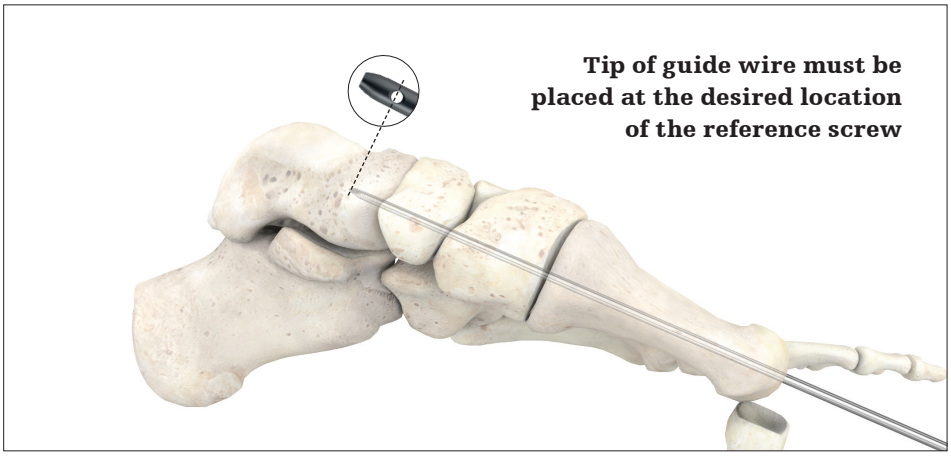

Guide wire insertion

Note: If you are performing both medial and lateral column procedures, it is recommended to stabilize and fix the lateral side with a guide wire as proposed on the lateral procedure (on page 41) before performing the medial operation shown in the following steps.

Operative technique
Medial column procedure

Estimation of nail length

Estimate nail length by utilizing the guide wire ruler. Ensure bone apposition before measuring by sliding the guide wire ruler over the guide wire and resting it firmly against the metatarsal head. Final determination of nail length will be made during reaming.

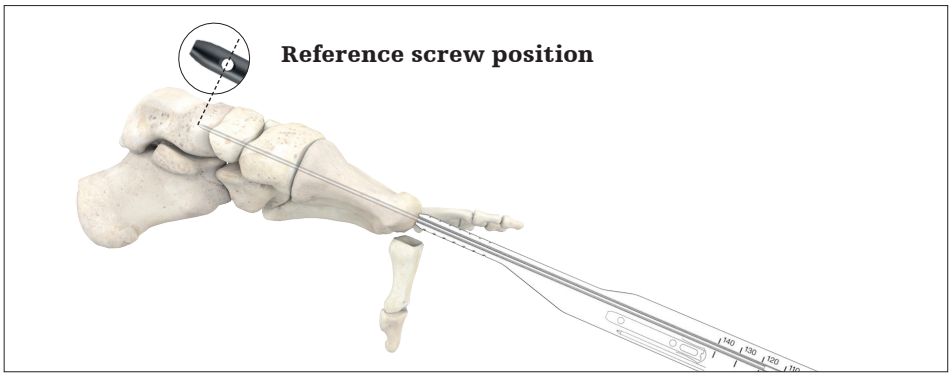

Estimation of nail length using guide wire ruler

⚠ CAUTION

- **When using the guide wire ruler, ensure that it is in contact with the bone. The guide wire ruler must be used before using any opening drill or reamer.**
- **Inadequate guide wire insertion depth could lead to insufficient stability or soft tissue/bone damage. Therefore fluoroscopy is recommended.**
- **When the guide wire extends past the guide wire ruler it means that the foot is too small to fit the shortest available nail.**

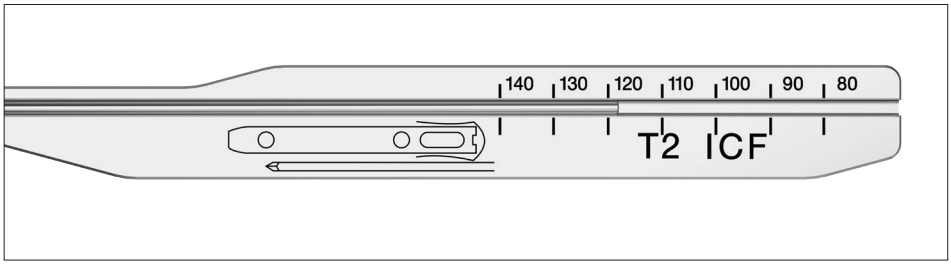

In this example, nail length is estimated at 120

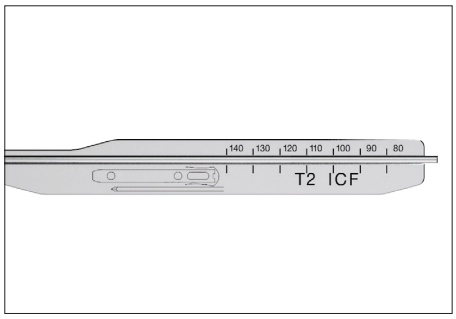

In this example, the smallest nail available is still too long for this patient

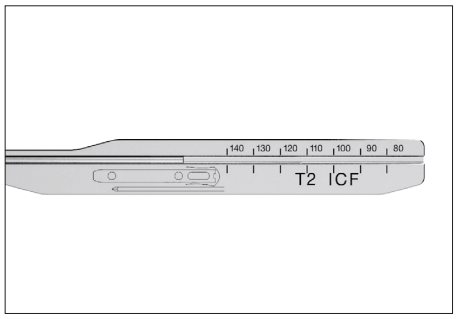

In this example, the longest nail available is too short for this patient; however, an end cap could be added for additional length

Estimation of the required nail length can be obtained by reading the number located between the same lines as the end of the wire. Should the guide wire end protrude past the guide wire ruler, it is very likely that the patient's foot requires a smaller nail than what is available in the T2 ICF portfolio. On the other hand, if a measurement shows a requirement for a longer nail, it is possible to countersink the nail up to 35mm and to increase the nail length using an end cap (max 20mm).
If compression is expected to be applied, the nail needs to be chosen at least two sizes shorter than indicated measurement, in order to avoid the nail extending beyond the bone after compression is applied.

Operative technique

Medial column procedure

After measurement, advance the guide wire at least 20mm deeper into the talus.

⚠ CAUTION

Insufficient over-insertion of the guide wire after length measurement could lead to guide wire back out during reaming.

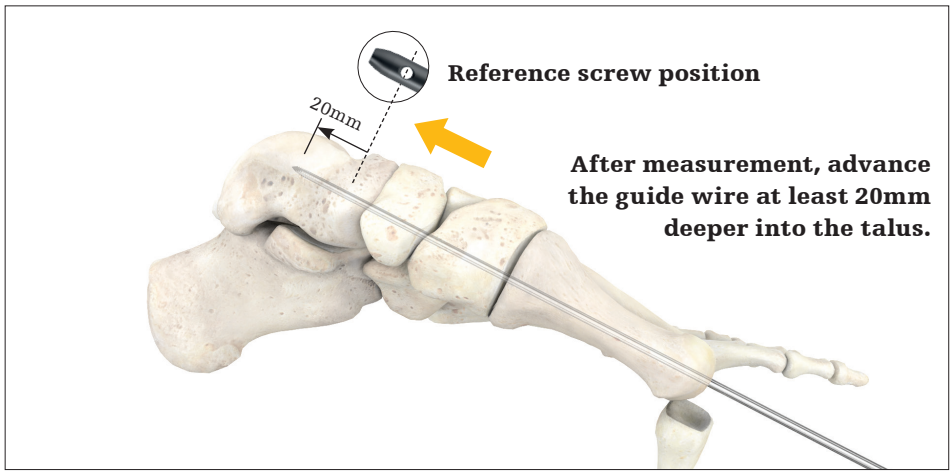

Guide wire advancement 20mm past reference screw

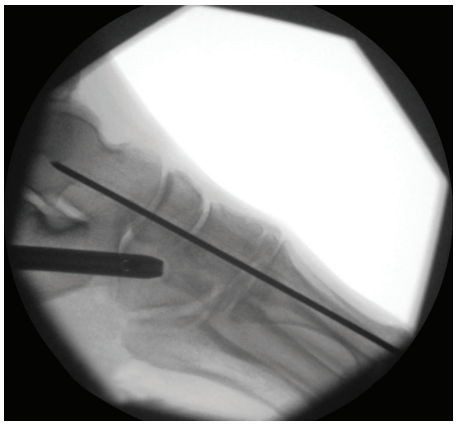

Operative technique
Medial column procedure

Bone plug extraction (optional)

Draw a line (see red line on the figures to the right) on the dorsal aspect of the metatarsal head, from the center outward to indicate the correct alignment of the bone plug.

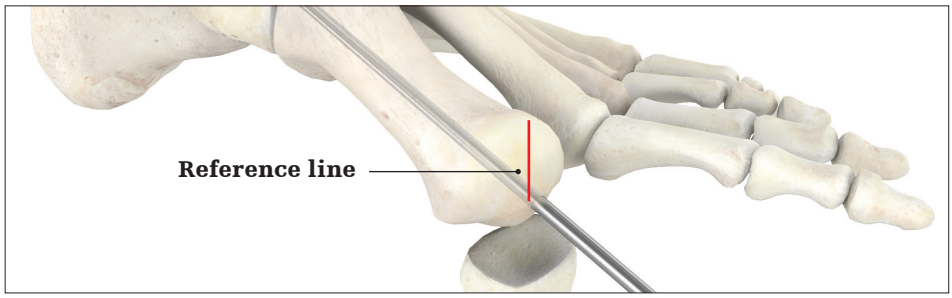

Line drawing for bone plug alignment

Use the crown drill over the guide wire to cut a bone plug from the metatarsal. Confirm that the patient's metatarsal is wide enough to utilize the crown drill. Stop drilling before the laser marking is reached.

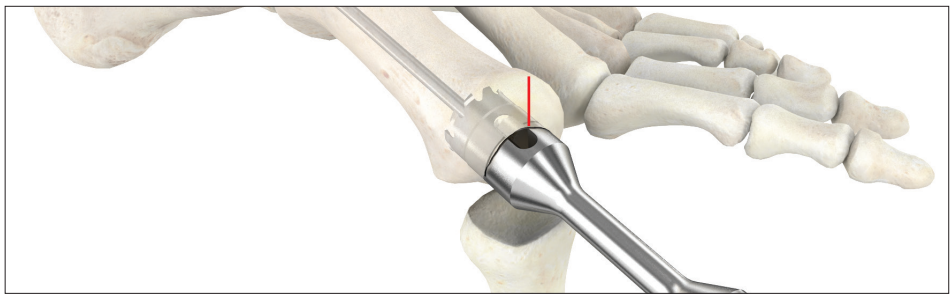

Advancement of crown drill

Align the window (opening) of the bone plug extractor on the line which was previously drawn on the metatarsal head. Then, hammer the extractor into the space created by the crown drill without rotating the instrument. When the cortex is visible through the extractor window and the extractor hits a hard stop, the plug can be sheared off by rotating the extractor around the guide wire.

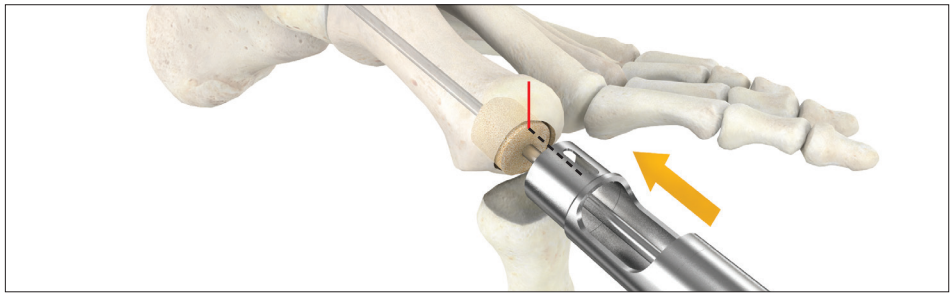

Advancement of bone plug extractor

⚠ CAUTION

To prevent fractures of the metatarsal and to prevent damage to the bone plug, do not twist the extractor until the adequate depth is reached.

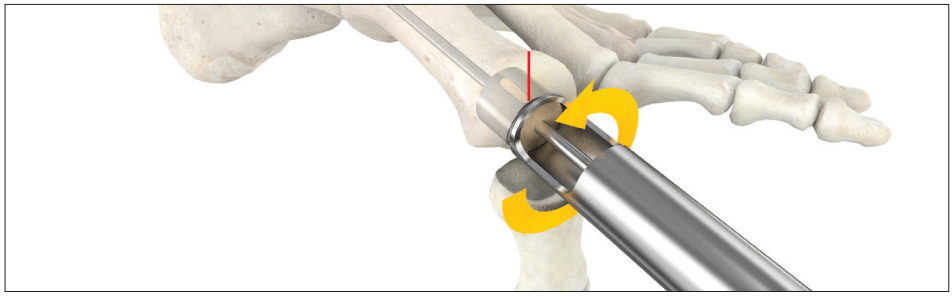

Bone plug shear-off and removal

Finally, leave the bone plug in the bone plug extractor and store them together in saline solution (0.9% solution) for later use.

Operative technique
Medial column procedure

Drilling / reaming

Use an opening drill until the notch is at the desired position of the reference screw in the talar neck (to ensure you have reached the desired depth).

Please refer to information on page 23 regarding notches which help determine adequate reaming depth.

Then using a reamer, while maintaining the guide wire in position using the guide wire pusher, ream over the guide wire the medial column using power to the desired diameter.

Please refer to pages 22 and 23 for information on how to determine nail diameter and length.

⚠ CAUTION

High rotational speed during drilling / reaming and guide wire insertion may lead to increased heat generation.

⚠ CAUTION

Use guide wire pusher to avoid guide wire backout during reaming.

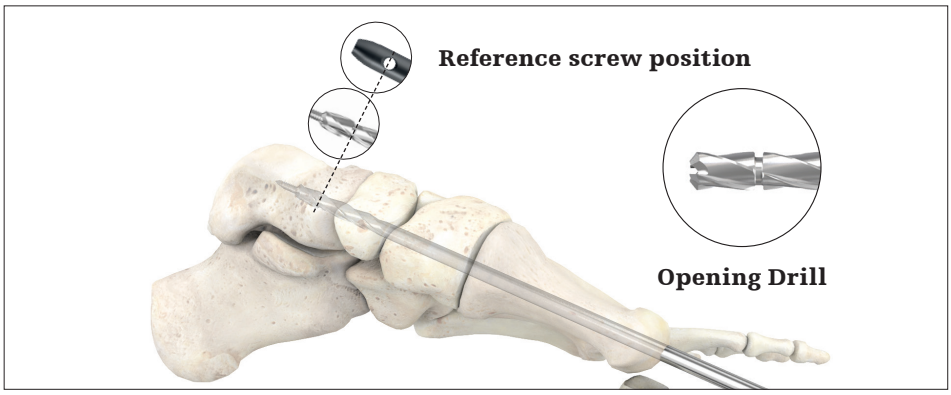

Drilling

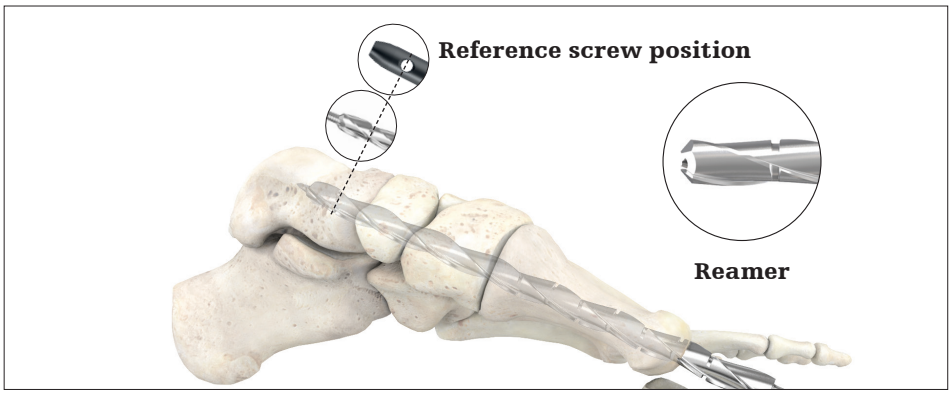

Reaming

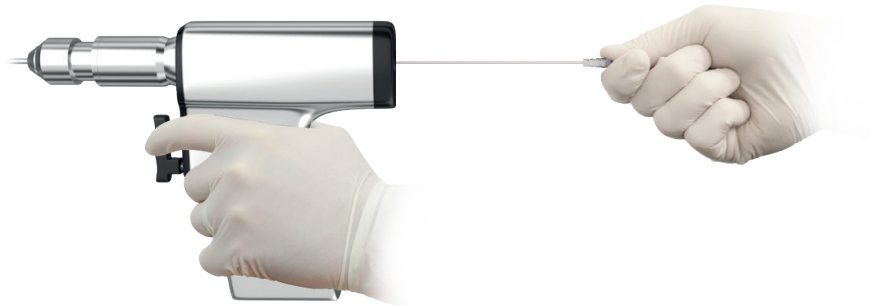

Guide wire pusher

Operative technique

Medial column procedure

Pay attention to chattering (contact with cortex) when defining the maximum diameter acceptable for the patient.
Use fluoroscopy when using 6.5, 7.5, 8.5, 9.5, and 10.5mm reamers to assess the remaining cortex thickness and avoid bone damage due to over-reaming.

⚠ WARNING

- **Inadequate nail diameter selection (based on reamer diameter) could cause e.g. bone damage or poor fixation. Use of fluoroscopy is advised.**
- **The smallest offered nail diameter is 8mm. The bones (especially the metatarsal) of the patient must be large enough to allow a corresponding reaming up to a diameter of 8.5mm.**
- **Use fluoroscopy to assess the remaining cortex thickness and avoid bone damage due to over reaming.**

It is recommended to choose a nail with a diameter 0.5mm smaller than the reamer.
In order to determine the required nail length, leave the last reamer in with the notch at the desired reference screw position and count the shaft notches; you must account for compression and replacement of the bone plug as well as bone apposition when determining the nail length.

Please see next section on page 23 for further information on nail length determination.

After the appropriate nail is chosen, assemble the targeting device and unpack the nail as shown on pages 24 to 26.

Operative technique
Medial column procedure

Notch information

Both the opening drill and the reamers feature a tip notch. This notch is used to visualize the intended position of the reference screw in the talar neck and in the cuboid, in the medial column and lateral column, respectively. This notch is visible under fluoroscopy and is used to determine the appropriate drilling/reaming depth.

Further notches are featured only on the reamers and are used to determine the adequate nail length. The notches correspond to the length of the different nails of the portfolio and counting them gives an estimation of the longest nail which would fit into the bone. To account for apposition, compression and replacement of the bone plug (medial column only), a correspondingly shorter nail should be chosen.

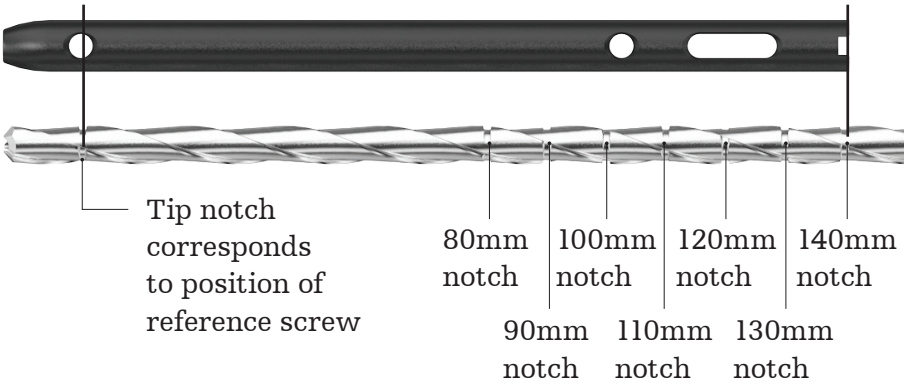

⚠ WARNING

- **When using the reamer, make sure of proper bone apposition prior to length measurement and pay close attention to joint spaces.**
- **The length determined using the notches on the reamer corresponds to a nail without compression. Select a shorter nail if compression is required (consider e.g. the required amount of compression or the use of the bone plug).**

Operative technique

Medial column procedure

Targeting device and nail assembly

The compression screw is already preloaded. Follow the steps below for the targeting device assembly.

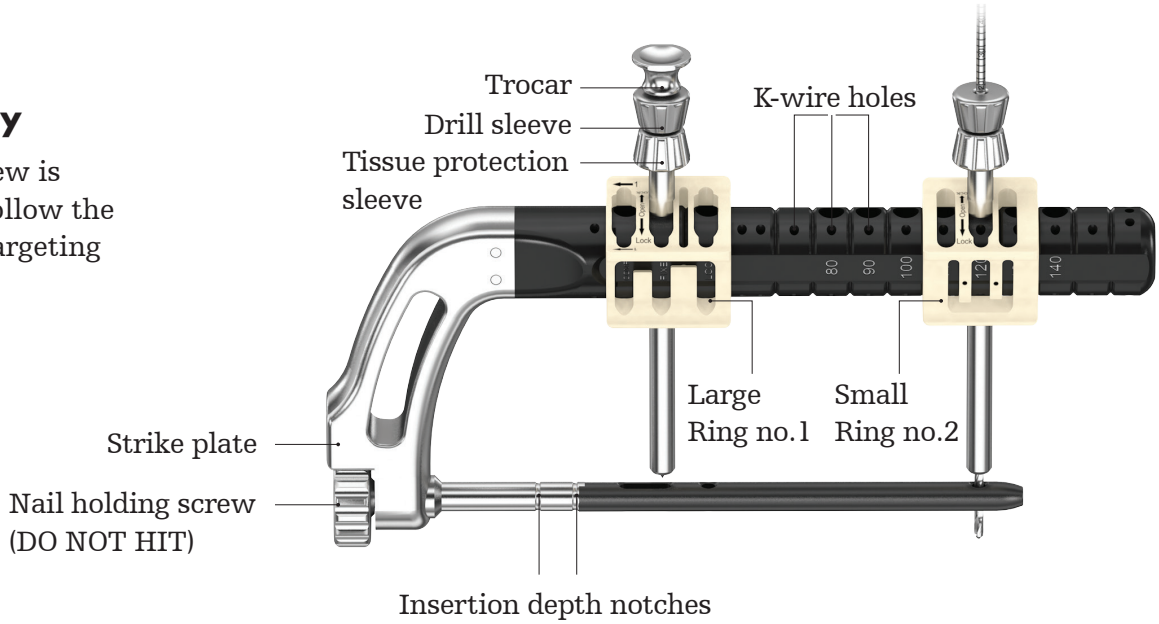

Pre-thread the nail holding screw into the targeting arm. (Self retaining feature).

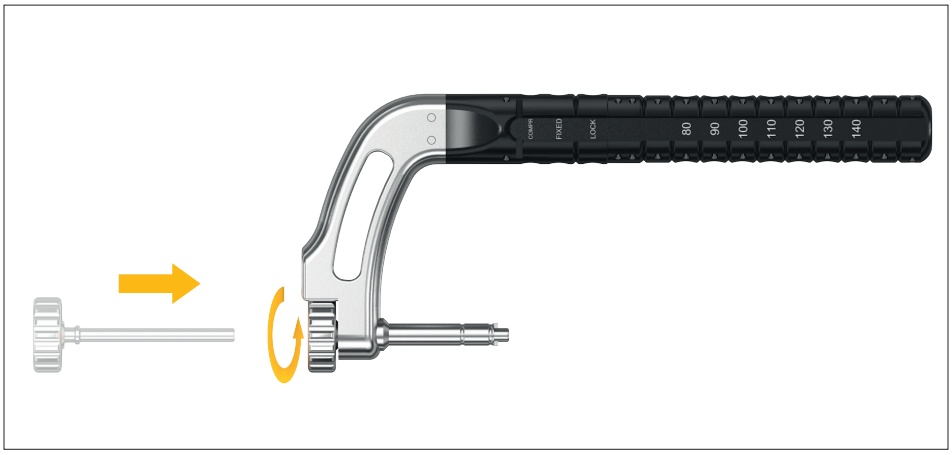

Nail holding screw insertion

Operative technique
Medial column procedure

Assemble locking ring no.1 (“1” laser marked on the part) first by following the arrow feature on the ring.

Assemble locking ring no.2 (“2” laser marked on the part); the ring can be shifted on the arm to match the chosen nail length.

- Slide ring #1 on the targeting arm until the stop is reached.
- Slide ring #2 on the targeting arm until the length of the chosen nail is displayed between the two dots shown on the ring.

Please note that both rings work the same way. In the neutral position (middle), the rings are open (Open) and only prevent the sleeves from falling out.

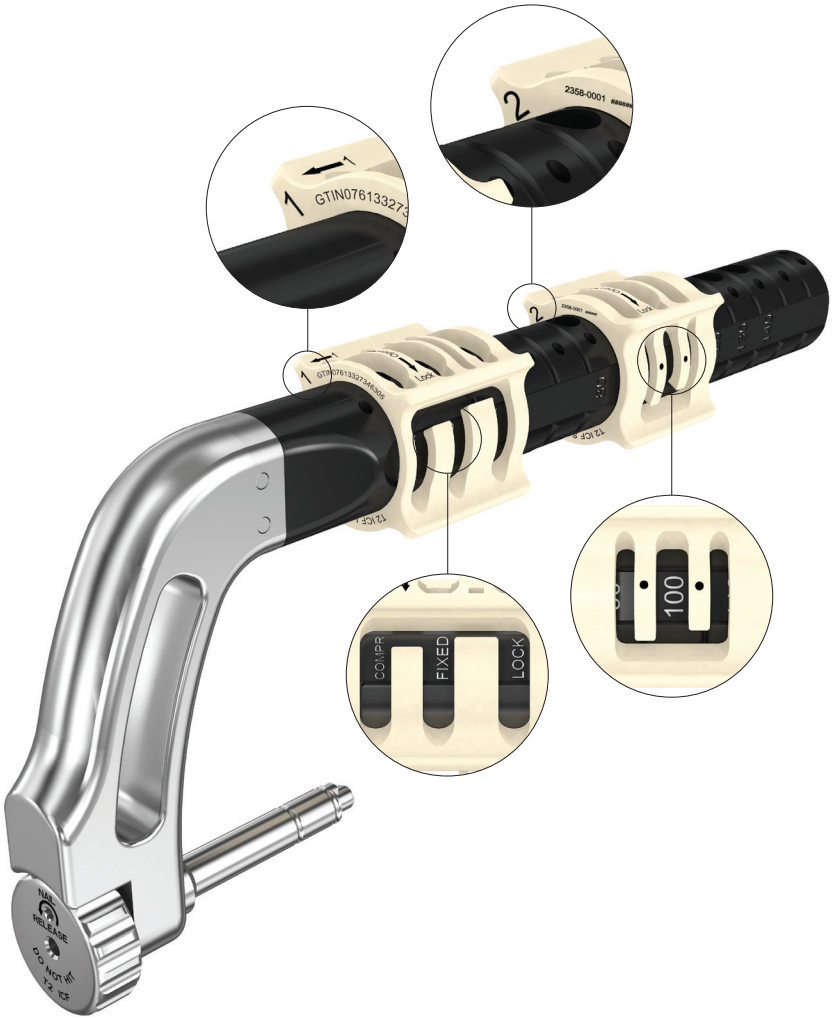

By rotating the ring until a click is heard, the sleeves are locked in position (Lock).

It is important to always lock the sleeves with the rings to prevent any unwanted movements of the sleeves during drilling.

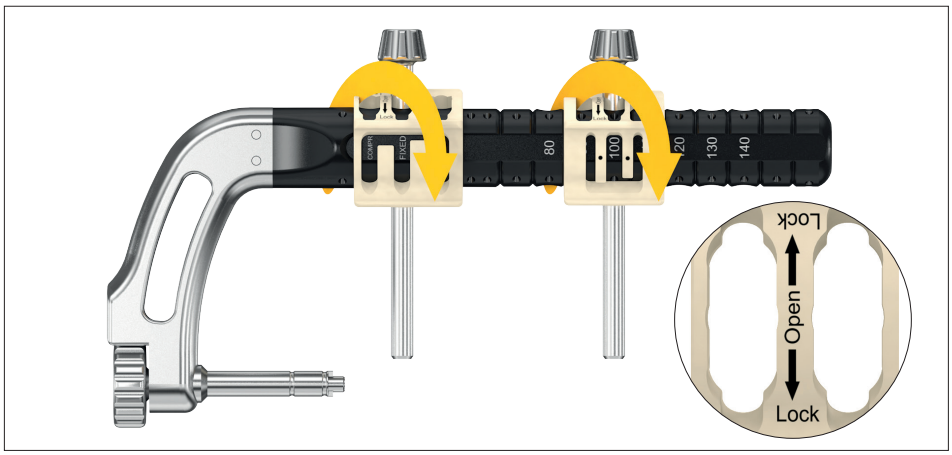

Locking of the sleeves

Operative technique

Medial column procedure

Select and unpack
the appropriate nail.

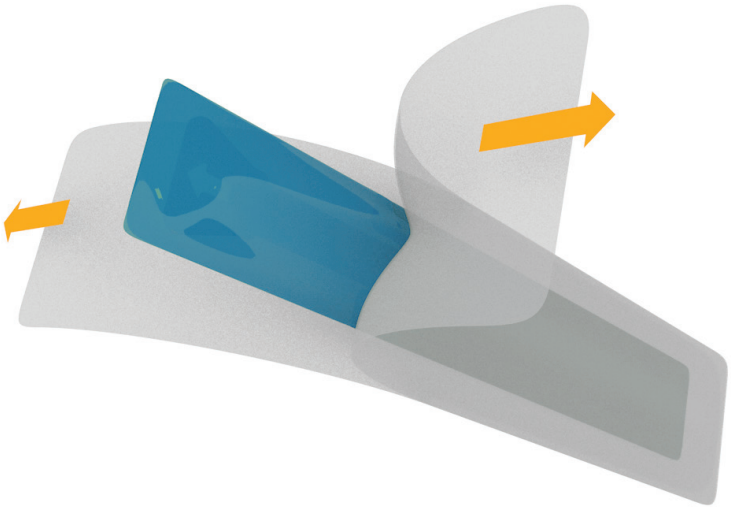

Remove the screw blocker
before the nail is mounted on the
targeting device. Mount the nail
on the targeting device by holding
the implant through the sleeve.

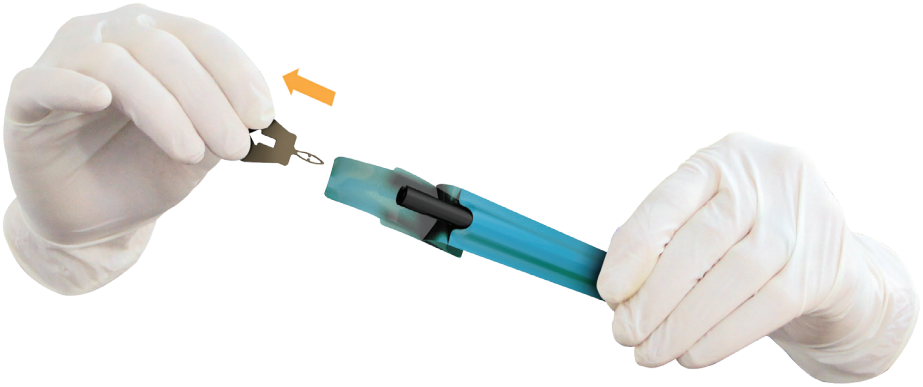

Screw blocker removal

Place the nail onto the targeting
device making sure to align the
nose of the targeting device with
the notch in the nail. Insert the
nail holding screw into the
targeting arm and the nail and
tighten. The packaging sleeve
can be completely removed
once the nail is assembled
to the targeting device.

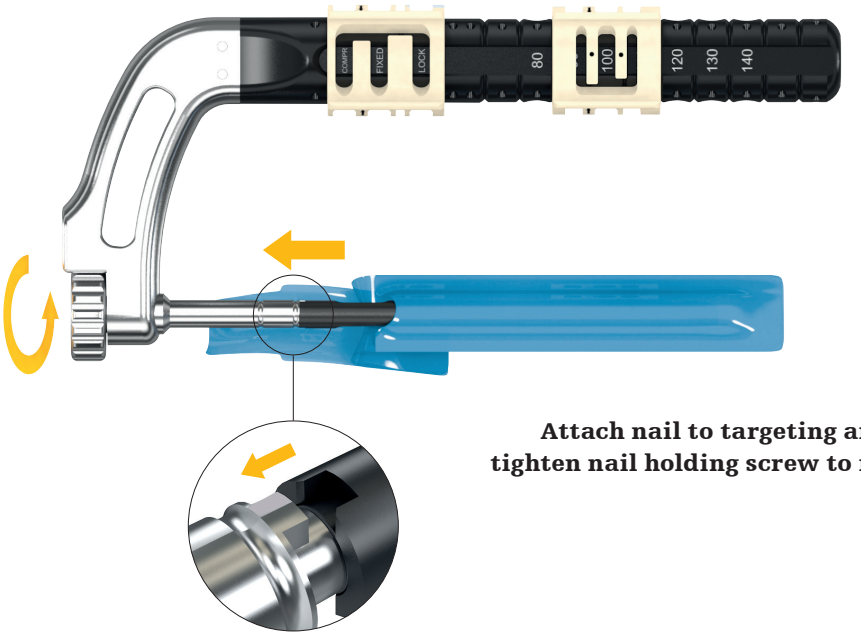

**Attach nail to targeting arm /
tighten nail holding screw to nail**

⚠ CAUTION

**Firmly tighten the nail
holding screw into the
nail to avoid loosening
of the nail.**

Operative technique

Medial column procedure

Assemble the sleeve system (trocar, drill sleeve and tissue protection sleeve) as shown; Perform assembly two times.

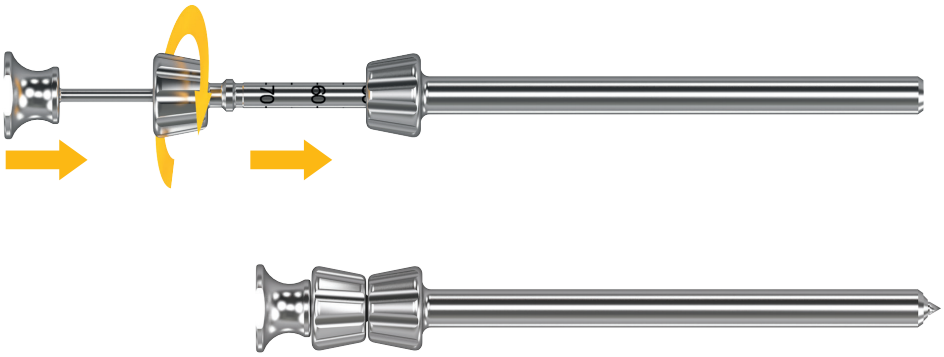

Insert the sleeve systems in the rings.

⚠ CAUTION

Prior to nail insertion please check correct alignment of the targeting device by inserting a Ø2.6mm drill bit through the assembled tissue protection and drill sleeve placed into the targeting arm at the position corresponding to the reference screw.

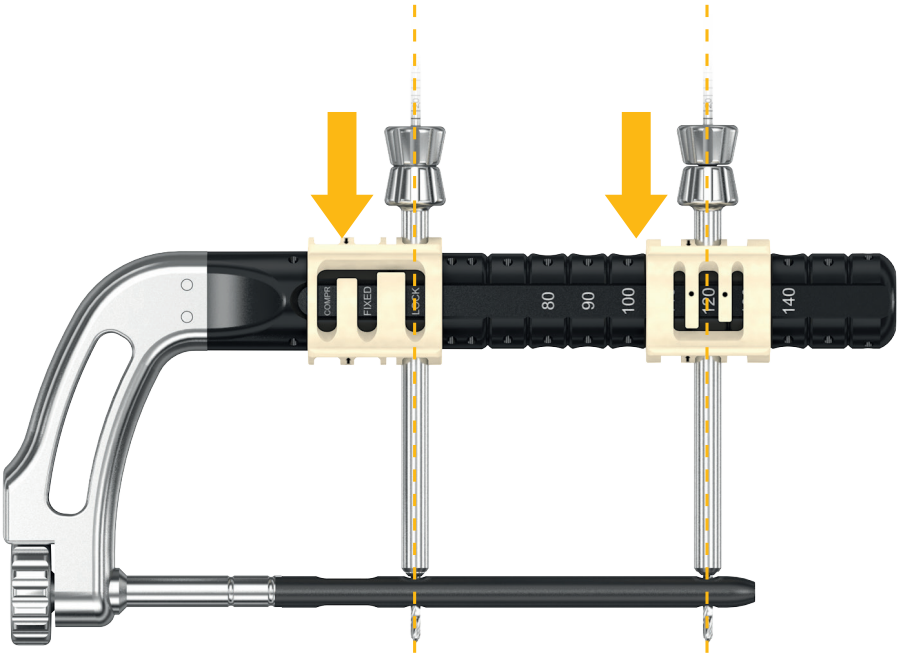

Sleeve systems insertion

Remove sleeve systems.

Operative technique
Medial column procedure

Nail Insertion

Insert the nail into the medial column using the targeting device. Final placement depends solely on the positioning of the reference screw hole in the talar neck. Gentle blows can be delivered on the dedicated strike plate of the targeting device.

Nail insertion depth notches

Notches on the nail connector of the targeting device give a visual aid of the location of the nail end and of the required over-insertion needed to guarantee a full (10mm) compression capacity.

⚠ CAUTION

- **After insertion of the nail, use fluoroscopy to ensure that the nail length chosen is correct and that there is enough room to apply compression.**
- **The nail holding screw must not be hit at any time during the operation.**
- **Make sure that the reference screw locking hole is positioned in the talar neck / cuboid.**

⚠ WARNING

- **Remove the guide wire from the cannulated nail before drilling transverse holes.**

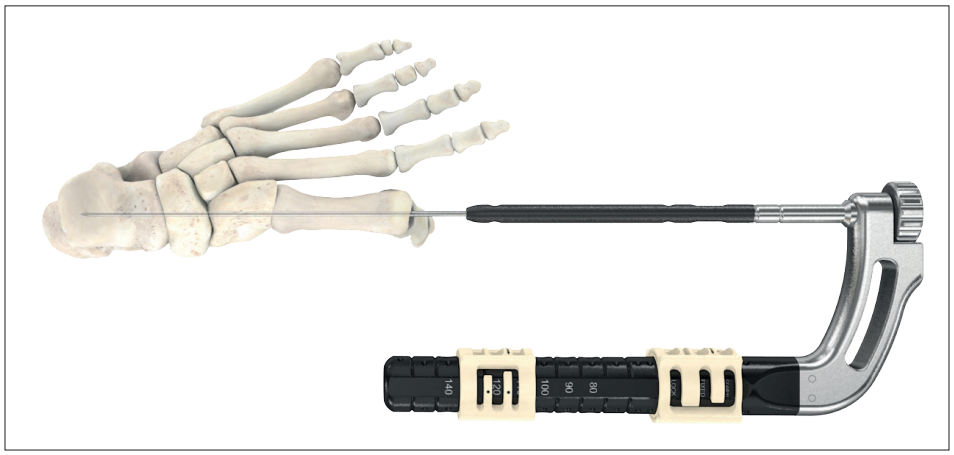

Nail insertion over guide wire

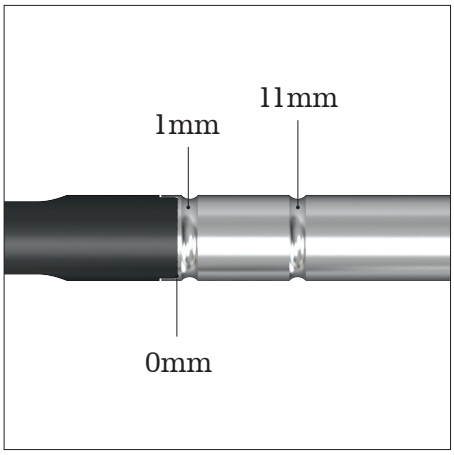

Notches to determine nail depth

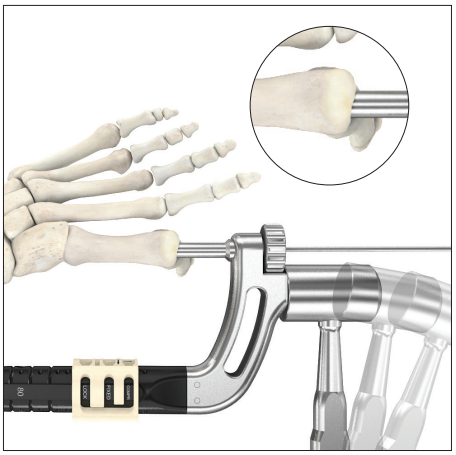

Hammering strike plate slightly for nail insertion

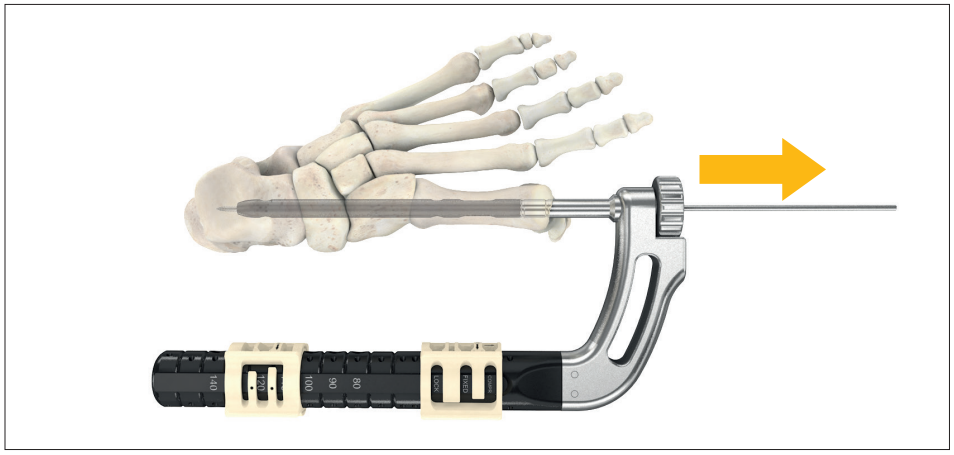

Guide wire removal

Operative technique
Medial column procedure

Reference screw insertion

Ensure that the small locking ring (ring no.2) is still in the position corresponding to the chosen nail length. Then insert the sleeve system in the targeting arm in the hole corresponding to the talar neck screw of the selected nail. Inserting the sleeve system will help indicate the angulation of the transverse screws.

Use the second sleeve system (ring no.1) to check screw trajectory and angulation, making sure the next screw is not inserted in the joint.

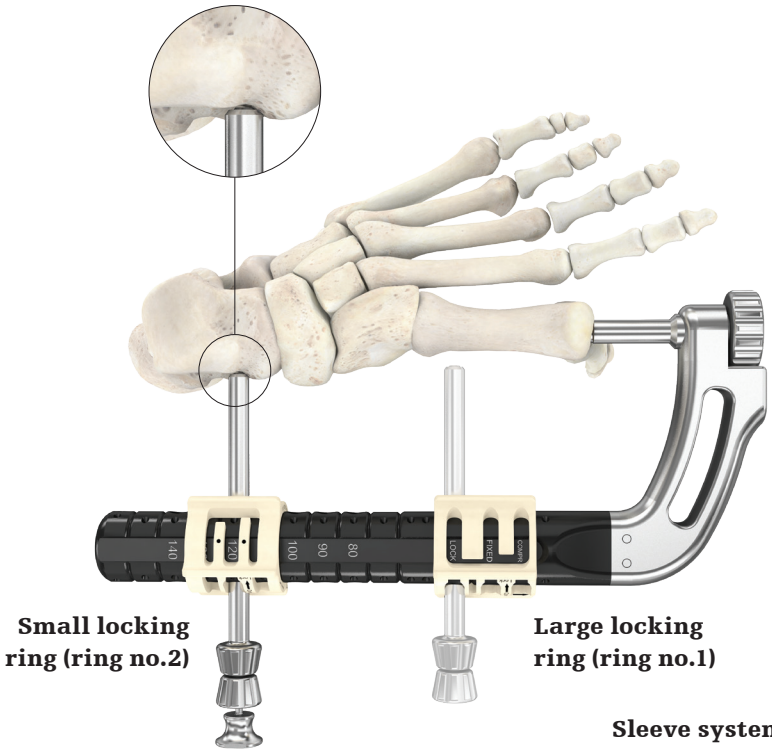

Sleeve system insertion

Proceed by making a small skin incision at the tip of the trocar which defines the talar neck screw so that the sleeve system can be placed directly on the bone.

A gap between the sleeves and the trocar indicates that the sleeves are in contact with the bone. Lock the ring and remove the trocar.

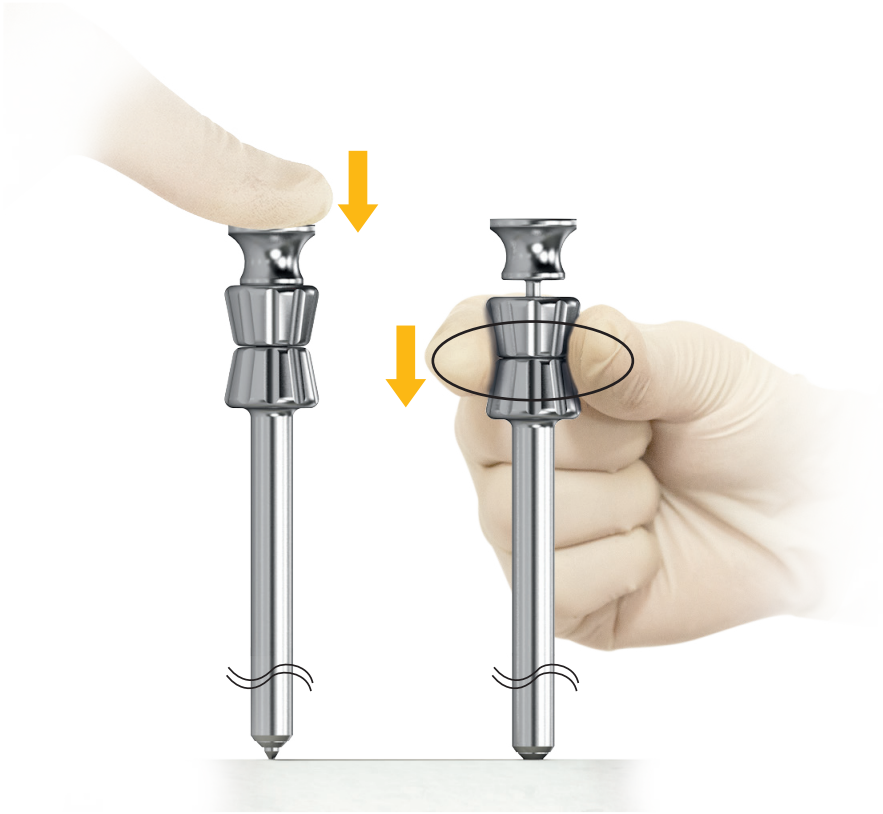

No bone sleeve contact **Bone sleeve in contact**

Operative technique

Medial column procedure

⚠ CAUTION

- **Ensure the locking ring is in locked position before drilling.**
- **Do not apply excessive torque on instruments to avoid mis-drilling.**
- **Use fluoroscopy to monitor drilling depth.**

1. Secure the position of the targeting device with a K-wire.
2. Drill through both cortices with the 2.6mm scaled drill bit. If you are measuring screw length with the drill bit, leave the drill bit in, and measure as explained on page 31; option 1.

The position of the tip of the drill as it relates to the far cortex is equal to where the tip of the screw will end. Therefore, if the tip of the drill is 1mm beyond the far cortex, the tip of the screw will also be 1mm beyond.

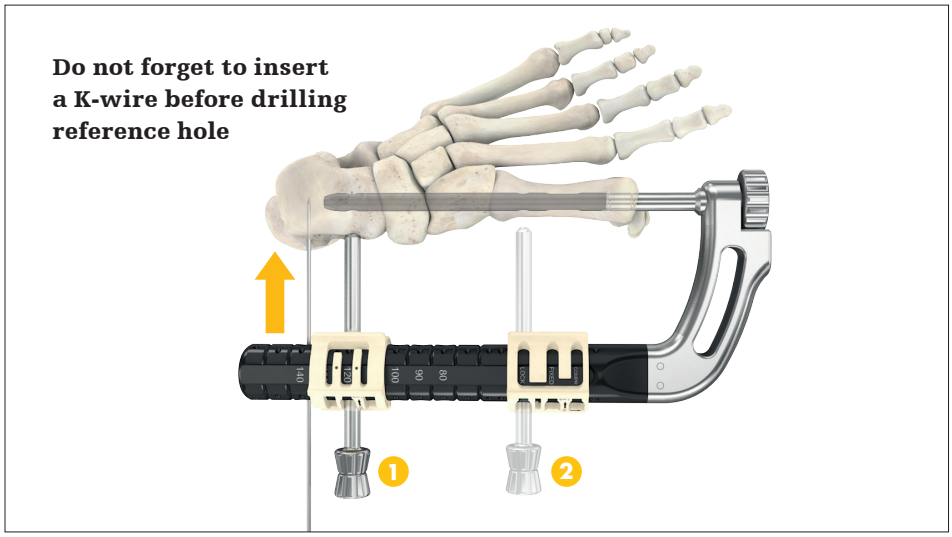

1) K-wire insertion and 2) Reference hole drilling

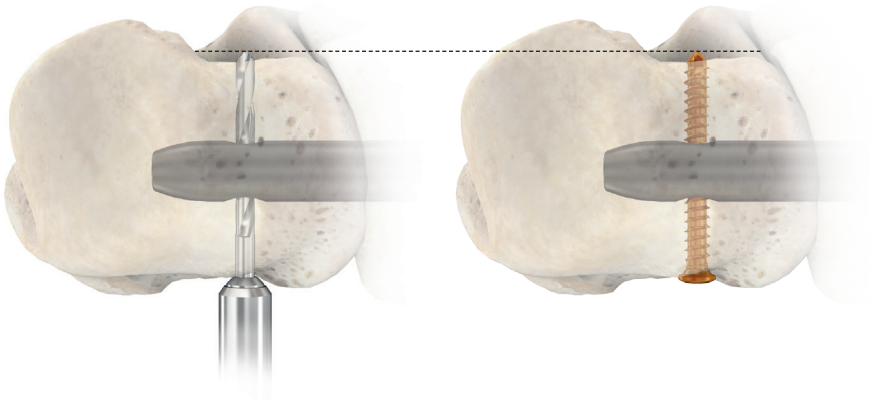

Position of drill tip **Position of screw tip**

Operative technique

Medial column procedure

⚠ CAUTION

Make sure that the assembly of tissue protection sleeve and drill sleeve is seated on bone prior to selecting final screw length.

Measure the required screw length. This can be measured in several ways:

1) Measure directly on the drill bit using the scale read at the end of the drill sleeve
2) Without moving the drill, measure by loosening the drill sleeve from the tissue protection sleeve and sliding it along the drill bit until it hits the shoulder of the drill
3) Measure by inserting screw depth gauge through the tissue protection sleeve; place the hook at the far cortex and read the length measurement at the end of the tissue protection sleeve

The screw depth gauge is calibrated so that when the hook is pulled back flush with the far cortex, the screw tip will end 1mm beyond the far cortex.

⚠ CAUTION

When measuring screw length, make sure that the hook is pulled back flush with the far cortex.

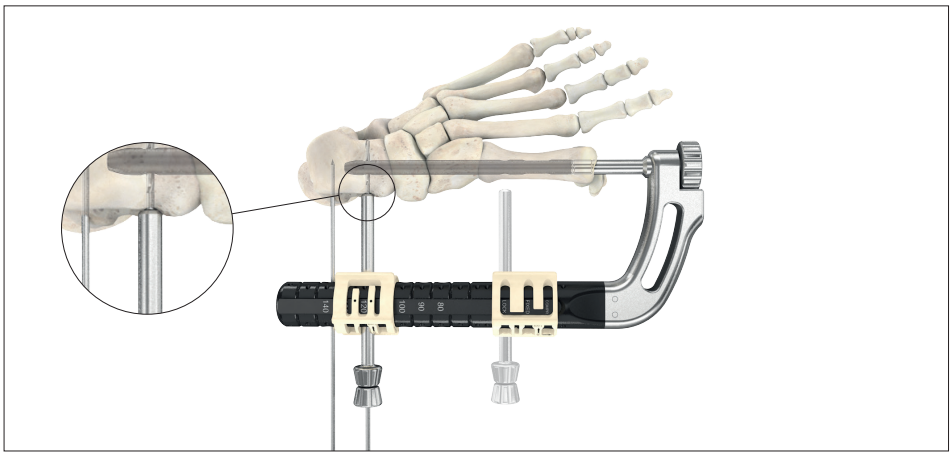

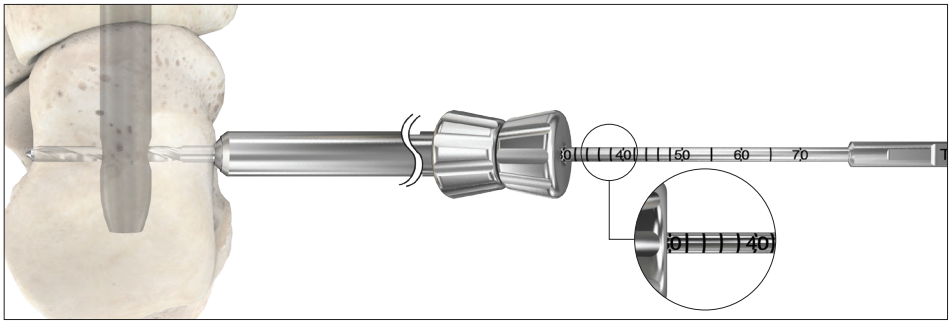

Screw measurement using drill bit

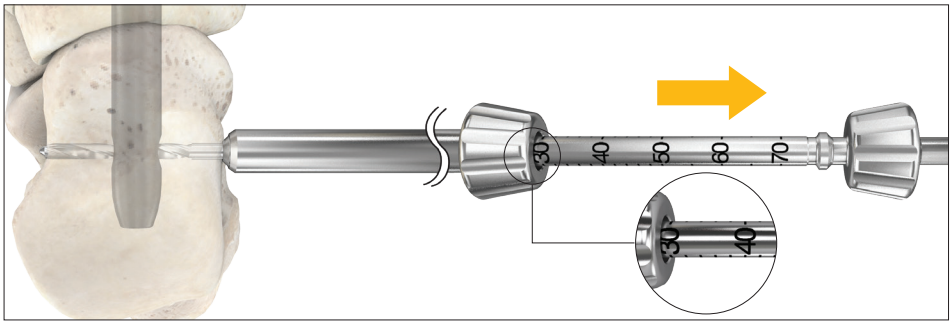

Screw measurement using drill sleeve

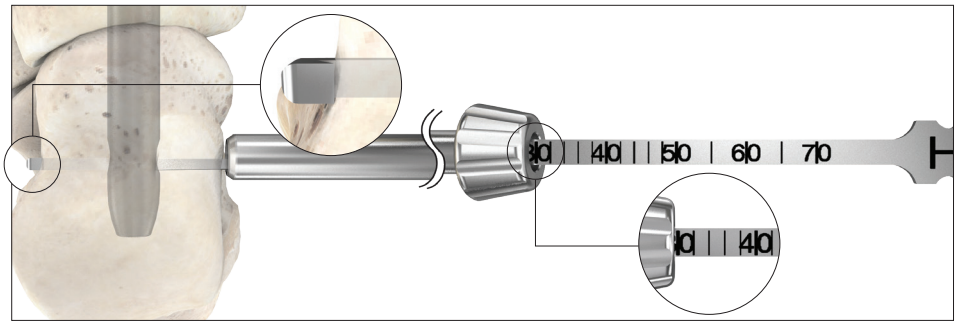

Screw measurement using depth gauge

Operative technique

Medial column procedure

After removing the drill sleeve, insert the appropriate screw with the T10 screwdriver. When seated properly, the screw will be flush with the cortical surface of the bone. The laser marking on the T10 screwdriver will be flush with the end of the tissue protection sleeve when the screw is fully seated.

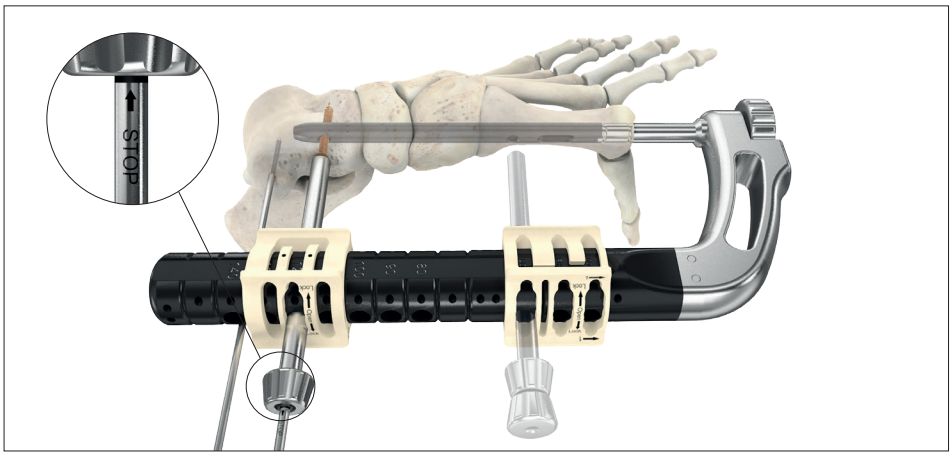

Reference screw insertion

After insertion of the screw, remove any K-wire from the targeting device.

⚠ WARNING

- **Screw insertion must be carried out carefully and under fluoroscopic control to avoid over-insertion of the screw through the cortex.**

⚠ CAUTION

- **Remove any K-wire from targeting device before attempting to apply apposition / compression.**

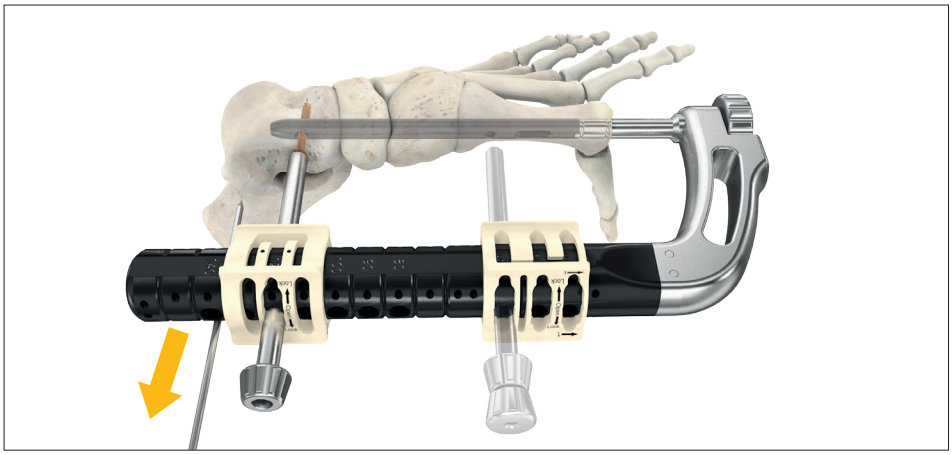

Guide wire removal

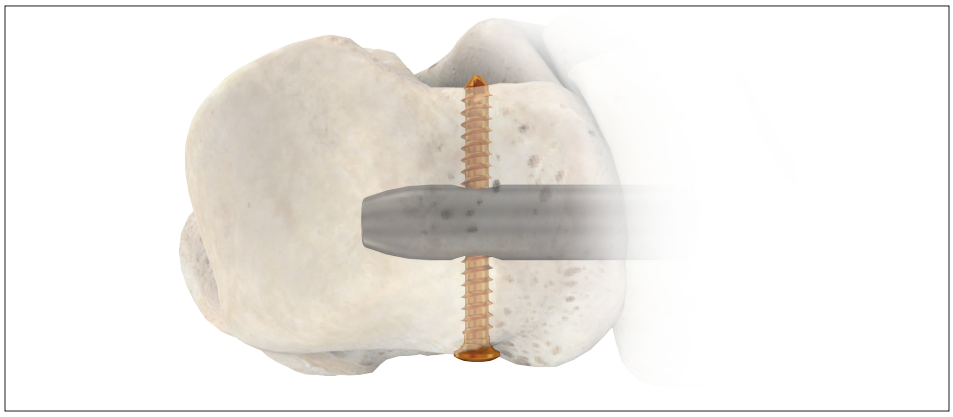

Final position of screw

Operative technique

Medial column procedure

Screw insertion without compression can be found on page 36.

Screw insertion in case of compression

Insert the sleeve system on Ring 1 of the targeting arm in the hole corresponding to the compression state "COMPR".

Make a small skin incision at the tip of the trocar so that the sleeve system can be placed directly on the bone; when the trocar is pushed back, the sleeve system is in contact with the bone. Then, lock the ring. Remove the trocar and then drill through both cortices with the 2.6mm scaled drill bit, ensuring sleeve system remains in contact with the bone; If you are measuring screw length with the drill, leave the drill in and measure as explained on page 31, option 1.

⚠ WARNING

- **Confirm adequate alignment and apposition of all the bones of the column before drilling the hole corresponding to the second screw.**

⚠ CAUTION

- **Ensure the locking ring is in locked position before drilling.**
- **Do not apply excessive torque on instruments to avoid mis-drilling.**

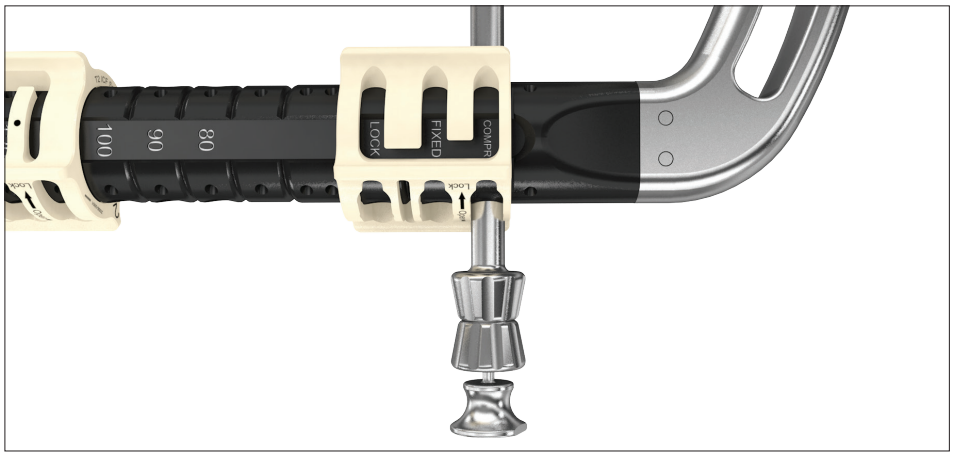

Sleeve insertion in the compression hole

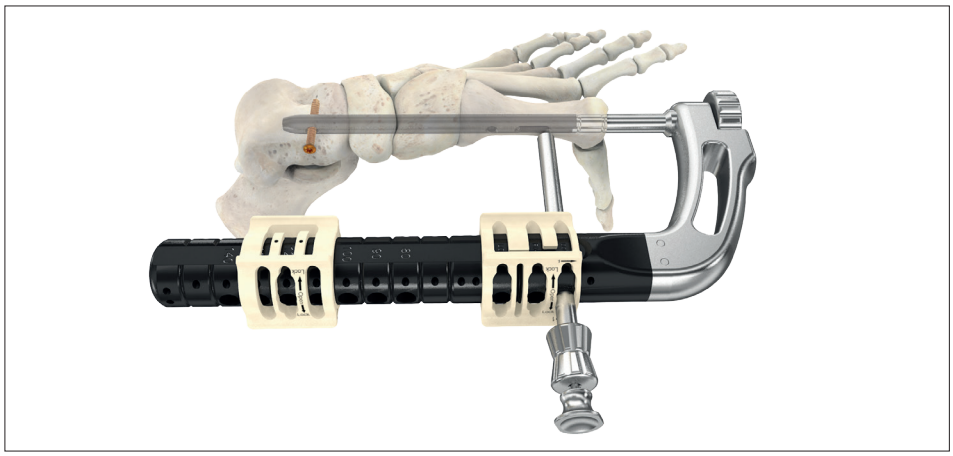

Locking of Ring 1

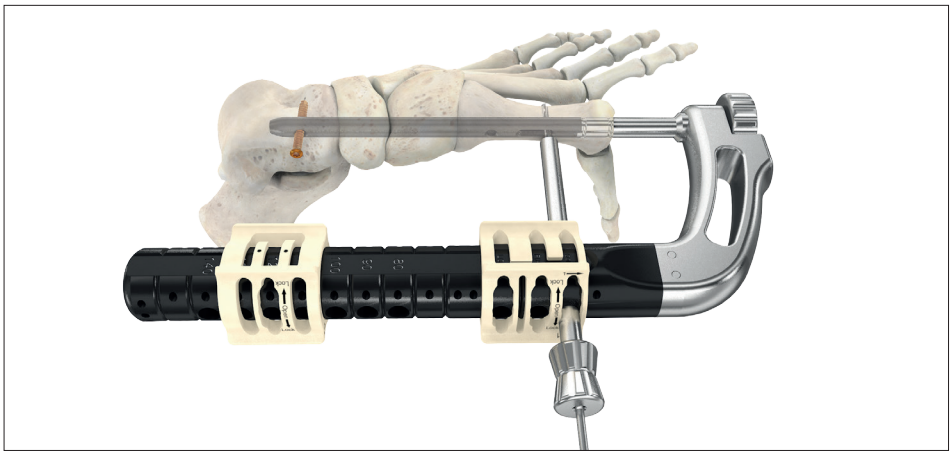

Drilling in oblong hole

Operative technique

Medial column procedure

Measure the required screw length as mentioned on page 31. Insert the chosen screw with the T10 screwdriver. When seated properly, the screw will be flush with the cortical surface of the bone. The laser marking on the T10 screwdriver will be flush with the end of the tissue protection sleeve when the screw is fully seated.

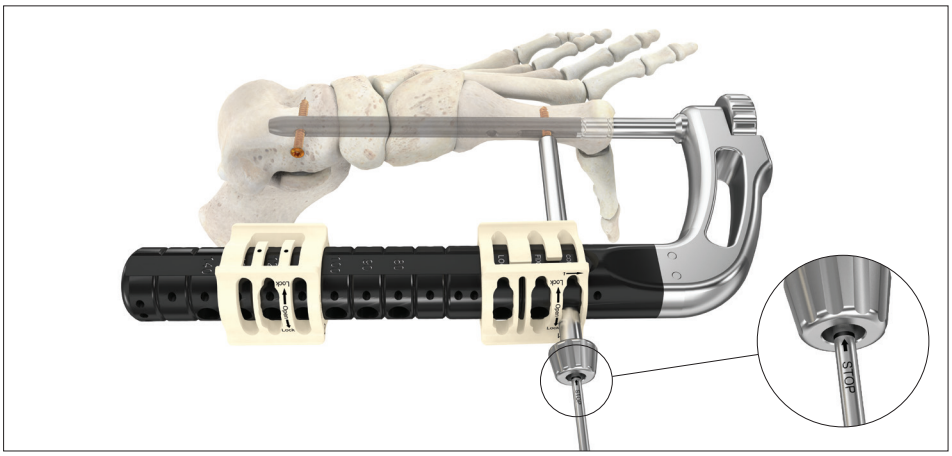

Screw insertion in the oblong hole

⚠ WARNING

- **Screw insertion must be carried out carefully and under fluoroscopic control to avoid over-insertion of the screw through the cortex.**
- **Apposition / compression must be carried out carefully and under fluoroscopy control to avoid over compression.**

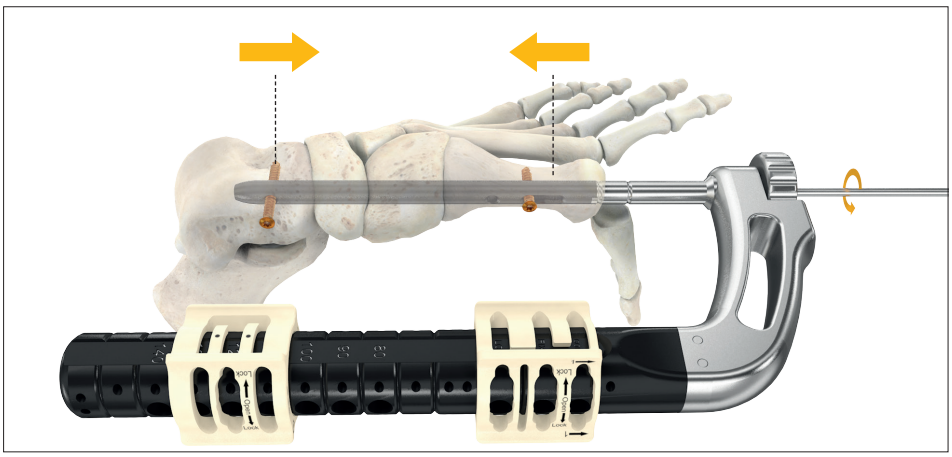

Compression of joints with compression screw

⚠ WARNING

First screw must be inserted in the reference hole and the second screw in the COMPR position prior to applying active, controlled apposition / compression.

Compress the joints with the compression screw using the screwdriver through the nail holding screw. A maximum of 10mm of compression can be applied.

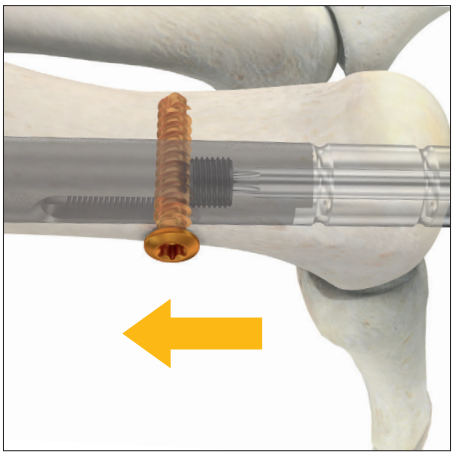

Advancement of compression screw

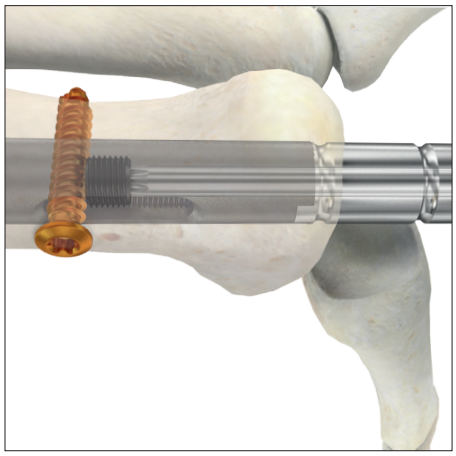

Screw position after compression is applied

Operative technique
Medial column procedure

Final screw insertion (if compression was applied)

Move sleeve system to the “LOCK” position on the targeting device, on Ring 1. Make a small skin incision at the tip trocar so that the sleeve system can be placed directly on the bone. When the trocar is pushed back, the sleeve is in contact with the bone. Lock the ring.

After removing the trocar, drill through both cortices with the 2.6mm scaled drill bit, ensuring sleeve system remains in contact with the bone; if you are measuring screw length with the drill, leave the drill in and measure as explained on page 31, option 1.

Measure the required screw length as mentioned on page 31. After removing the drill sleeve, insert the appropriate screw with the T10 screwdriver. When seated properly, the screw will be flush with the cortical surface of the bone. The laser marking on the T10 screwdriver will be flush with the end of the tissue protection sleeve when the screw is fully seated. Proceed to page 39.

⚠ CAUTION

- **Ensure the locking ring is in locked position before drilling.**
- **Do not apply excessive torque on instruments to avoid mis-drilling.**

⚠ WARNING

- **Screw insertion must be carried out carefully and under fluoroscopic control to avoid over-insertion of the screw through the cortex.**

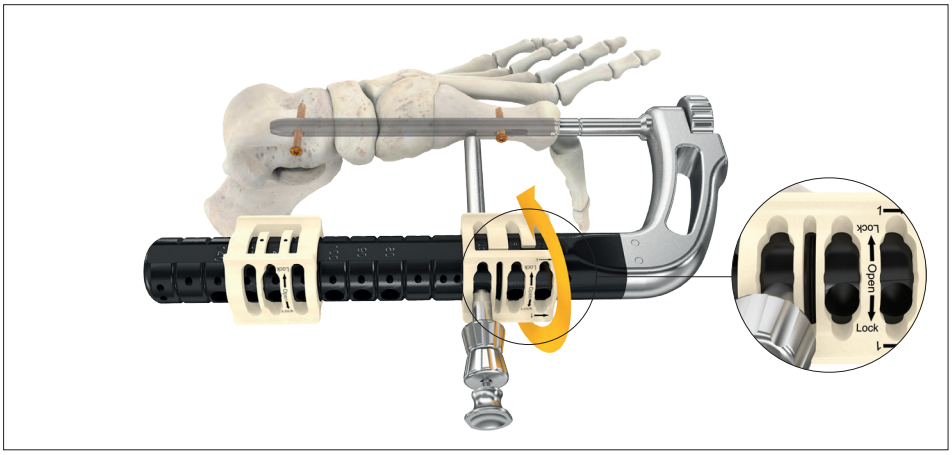

Sleeve system insertion in the "LOCK" position and locking of Ring 1

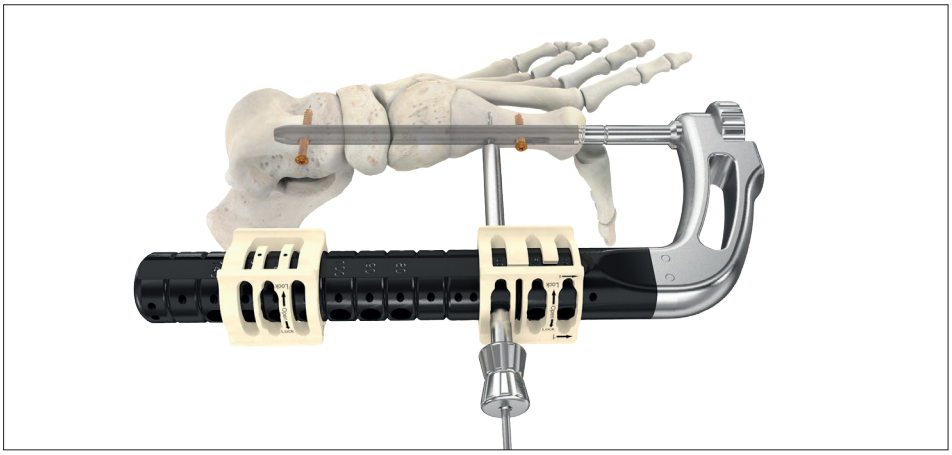

Drilling in locking hole

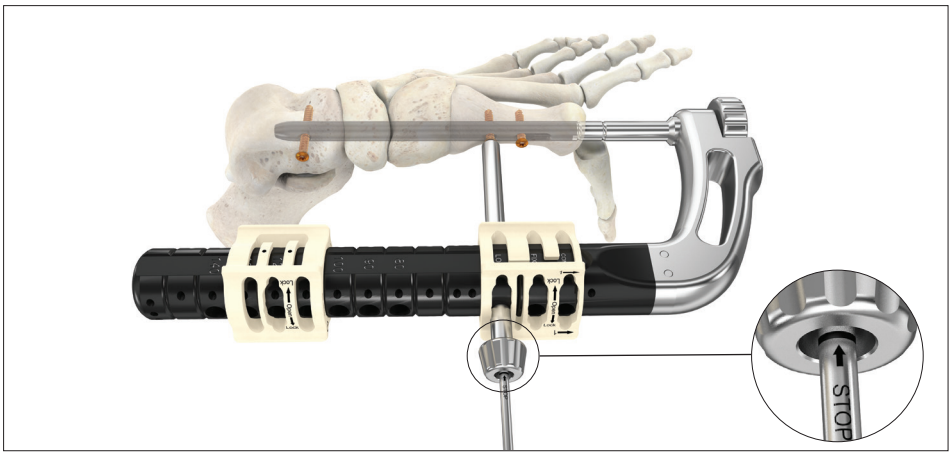

Screw insertion in the locking hole

Operative technique
Medial column procedure

Screw insertion without compression

If no compression is needed, place the sleeve system in the "LOCK" position on Ring 1 position while manually ensuring good bone apposition.

Make a small skin incision at the tip of the trocar so that the sleeve system can be placed directly on the bone; when the trocar is pushed back, the sleeve system is in contact with the bone. Then, lock the ring.

After removing the trocar, drill through both cortices with the 2.6mm scaled drill bit, ensuring sleeve system remains in contact with the bone; If you are measuring screw length with the drill, leave the drill in and measure as explained on page 31, option 1.

⚠ WARNING

- **Confirm adequate alignment and apposition of all the bones of the column before drilling the hole corresponding to the second screw.**

⚠ CAUTION

- **Ensure the locking ring is in locked position before drilling.**
- **Do not apply excessive torque on instruments to avoid mis-drilling.**

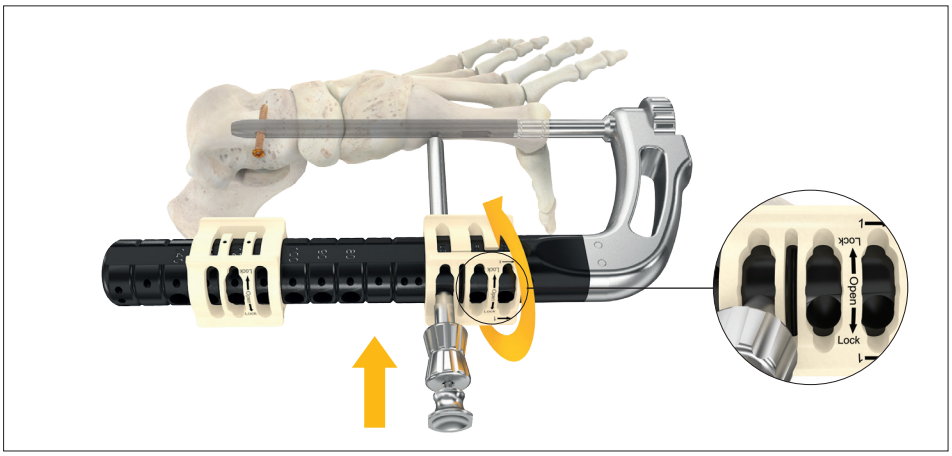

Sleeve system insertion in "LOCK" position

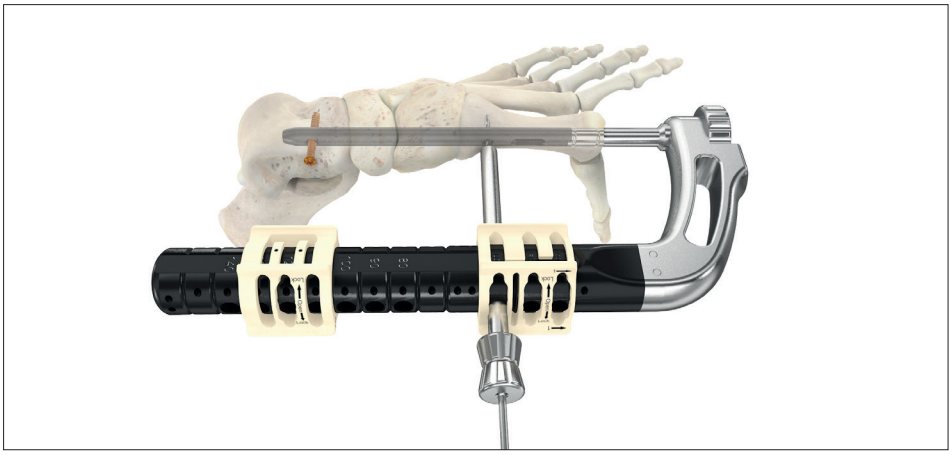

Drilling in locking hole

Operative technique

Medial column procedure

Measure the required screw length as mentioned on page 31. After removing the drill sleeve, insert the appropriate screw with the T10 screwdriver. When seated properly, the screw will be flush with the cortical surface of the bone. The laser marking on the T10 screwdriver will be flush with the end of the tissue protection sleeve when the screw is fully seated.

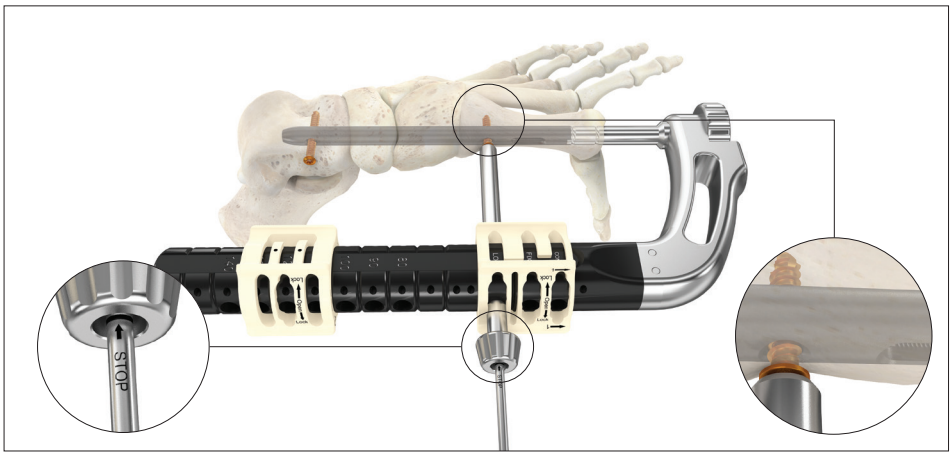

Screw insertion

⚠ WARNING

- **Screw insertion must be carried out carefully and under fluoroscopic control to avoid over-insertion of the screw through the cortex.**
- **Apposition/compression must be carried out carefully and under fluoroscopy control to avoid over-compression.**

Final screw insertion (if no compression was applied)

Move the sleeve system to the “FIXED” position on the targeting device, on Ring 1.

Make a small skin incision at the tip trocar so that the sleeve system can be placed directly on the bone. When the trocar is pushed back, the sleeve is in contact with the bone. Lock the ring.

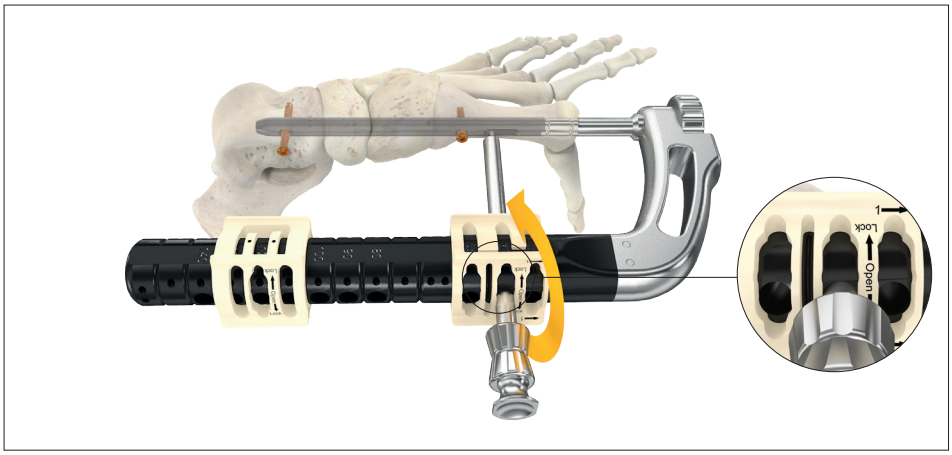

Sleeve system insertion in "FIXED" position

⚠ CAUTION

Ensure the locking ring is in locked position before drilling.

Operative technique

Medial column procedure

After removing the trocar, drill through both cortices with the 2.6mm scaled drill bit, ensuring sleeve system remains in contact with the bone; if you are measuring screw length with the drill, leave the drill in and measure as explained on page 31, option 1.

After removing the drill sleeve, measure the required screw length as mentioned on page 31. Insert the appropriate screw with the T10 screwdriver. When seated properly, the screw will be flush with the cortical surface of the bone. The laser marking on the T10 screwdriver will be flush with the end of the tissue protection sleeve when the screw is fully seated.

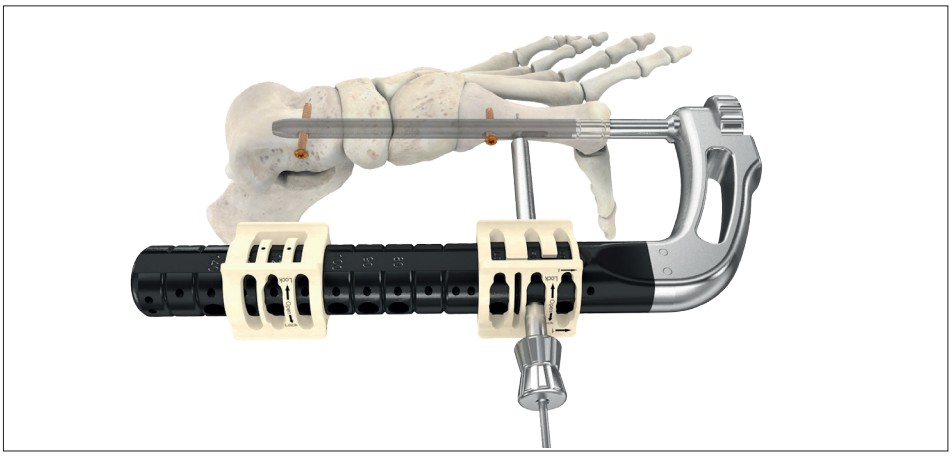

Drilling in "FIXED" hole of Ring 1

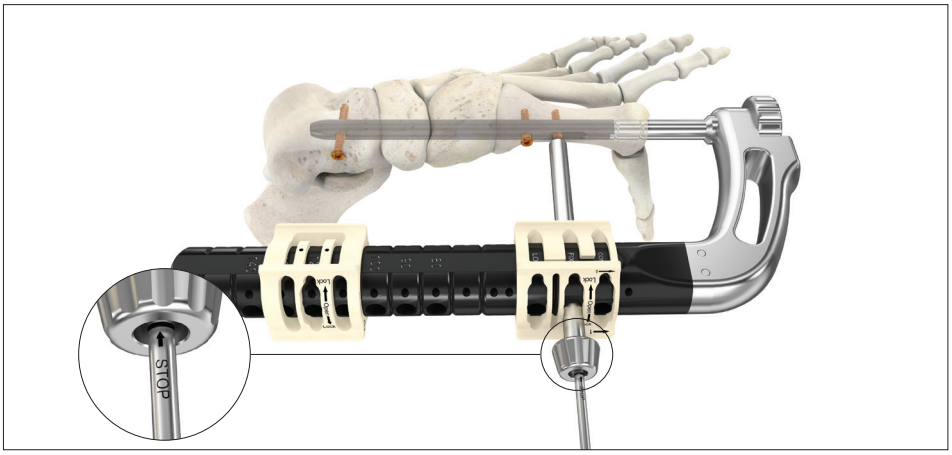

Screw insertion

⚠ CAUTION

- **Do not apply excessive torque on instruments to avoid mis-drilling.**

⚠ WARNING

- **Screw insertion must be carried out carefully and under fluoroscopic control to avoid over-insertion of the screw through the cortex.**

Operative technique
Medial column procedure

Disassembly of the targeting arm and end cap insertion

Loosen the nail holding screw until the nail is completely released. If necessary, the T10 screwdriver can be used to loosen the nail holding screw.

Nail holding screw loosening

Remove the targeting arm.

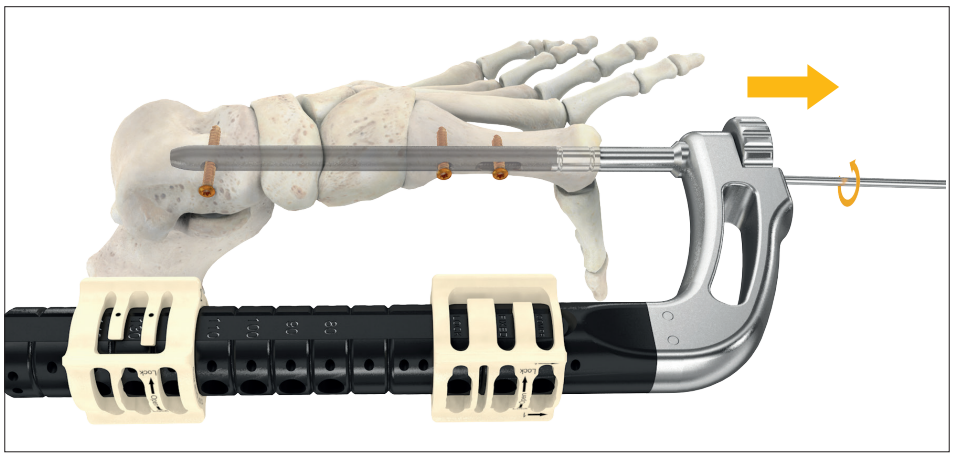

Removal of targeting arm

Measure the required end cap length using the scale on the back of the guide wire ruler; notches are visible every 5mm on the ruler. Consider the dimensions of the bone plug during calculation to avoid shortening the bone plug.

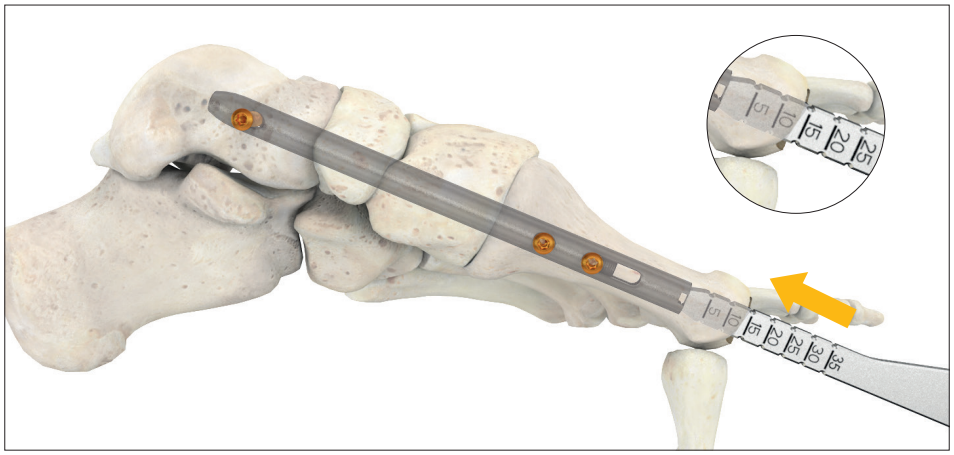

End cap measurement

Operative technique
Medial column procedure

Insert the end cap using the T10 screwdriver blade.

⚠ WARNING

- **It is mandatory to place an end cap in order to prevent unwanted movement of the premounted compression screw.**
- **Under fluoroscopy ensure correct reduction and final implant placement.**

Note: A 0mm end cap will sit flush with the end of the nail and will not lengthen it.

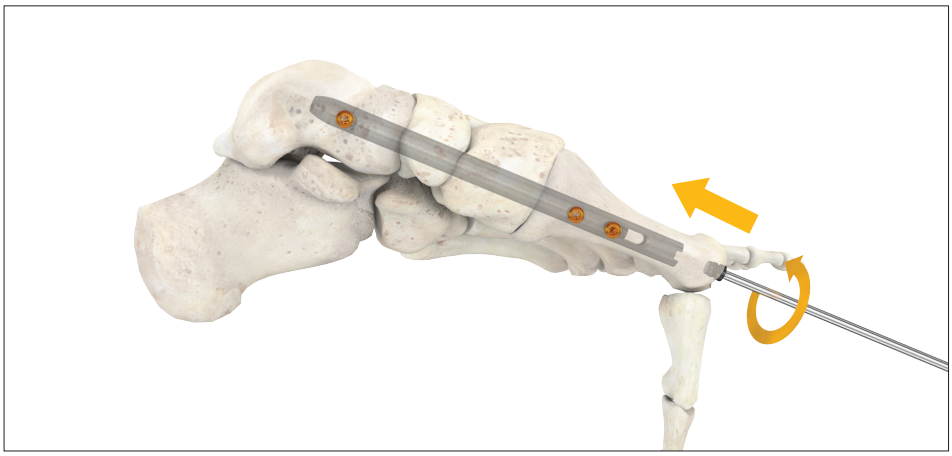

End cap insertion

Bone plug repositioning (optional)

Remove the bone plug from the saline solution and use the extractor and the pusher to reposition the bone plug in the void. The previously drawn line can now be used to realign the plug in the original position. Bone substitute can be used to fill a void if desired. Bone remains from the reaming procedure can also be used to add additional stability to the plug.

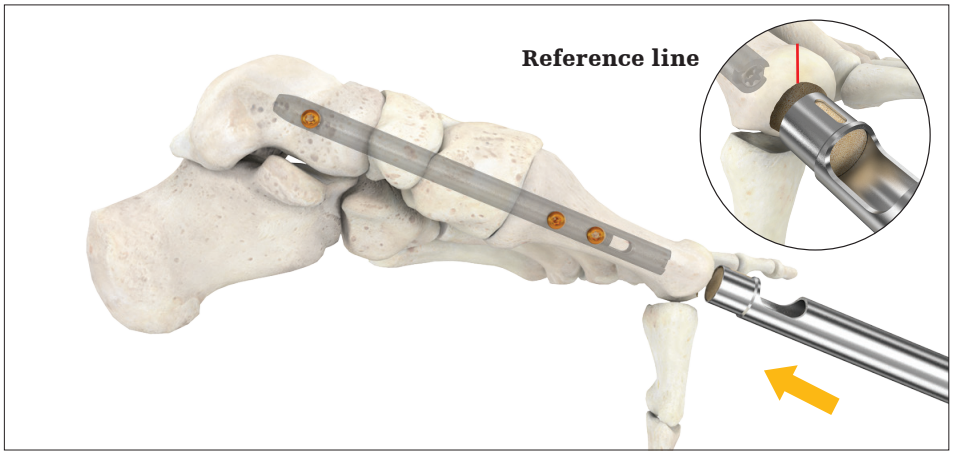

Bone plug repositioning

⚠ WARNING

- **Ensure proper fit of the bone plug. Correct alignment of the plug according to its original position. Inadequate bone plug fit could lead to friction and/or bone healing problems.**
- **Under fluoroscopy ensure correct reduction and final implant placement.**

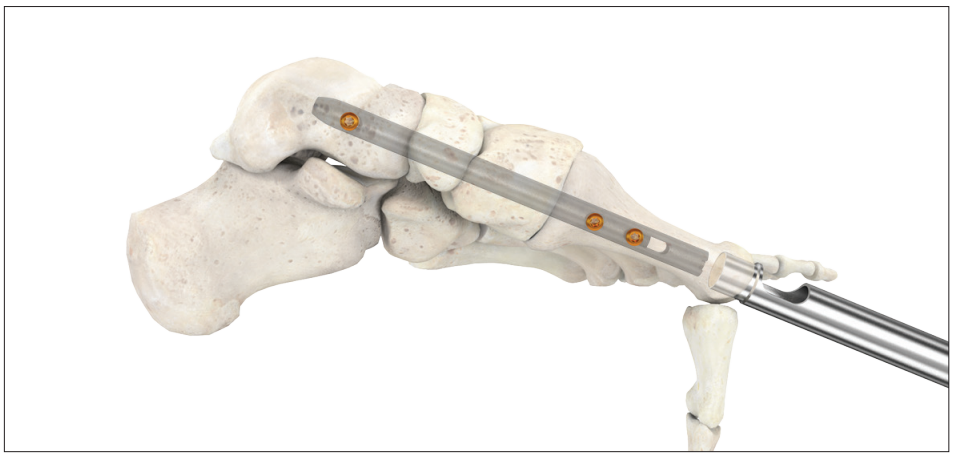

Bone plug extractor removal

Operative technique
Lateral column procedure

Preoperative planning

Thorough evaluation of pre-operative radiographs of the affected extremity is critical.

The surgeon should consider the apposition/compression feature of the T2 ICF nail prior to determining the length of the implant. If apposition/compression is planned, the nail should be 15mm to 20mm shorter than the measured length. Up to 10mm of active apposition/compression is possible.

⚠ WARNING

- **In the presence of an ankle equinus, secondary to a gastrocnemius / soleus or isolated gastrocnemius muscle contracture, a lengthening procedure should be contemplated to reduce the compensatory strain effect on the midfoot.**
- **The implants are designed to support bony fusion. In the absence of fusion early implant breakage may occur due to overload.**

Patient positioning

Patient positioning is surgeon dependent. It is recommended to place the patient in the lateral decubitus position on a radiolucent table. Care should be taken to assure neutral alignment of the foot and ankle. Recommendations for safe patient positioning should be followed for proper support of the patient on the table.

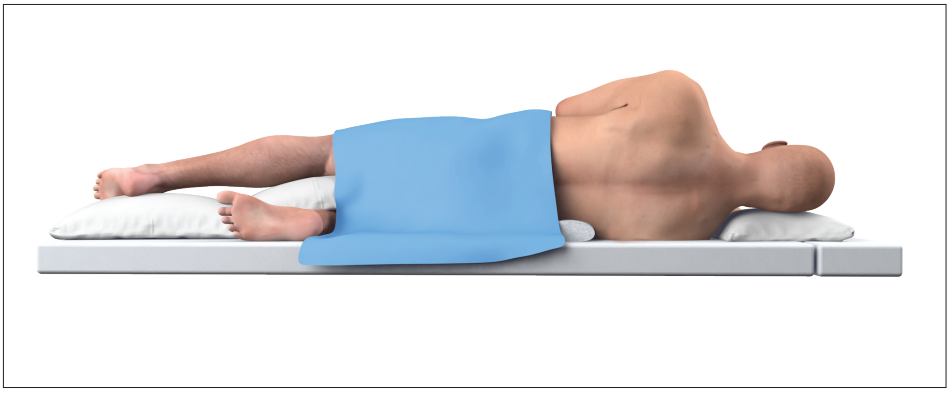

Patient positioning

Joint surface preparation

Prepare all the joints for fusion and correct deformities as necessary. Joint preparation and appropriate alignment of both columns (if applicable) should be done before any nail is inserted.

Incision

Make a longitudinal posterior midline incision.

Opening incision

Operative technique
Lateral column procedure

Implantation

Guide wire insertion

Using fluoroscopic guidance, place the 285mm guide wire from the lateral aspect of the calcaneal tuberosity beginning just below the insertion of the achilles tendon and aiming for 5mm above the plantar cortex of the calcaneal cuboid joint.

The starting point should be adjusted to account for the natural pitch of the calcaneal tuberosity which varies among individuals.

Make sure the cuboid is reduced to the calcaneous appropriately prior to crossing the joint with the guide wire.

Also, make sure the final position of the guide wire lies squarely in the middle of the cuboid. Refer to pages 16-17 for instructions related to the guide wire targeter assembly.

Guide wire entry point – lateral view

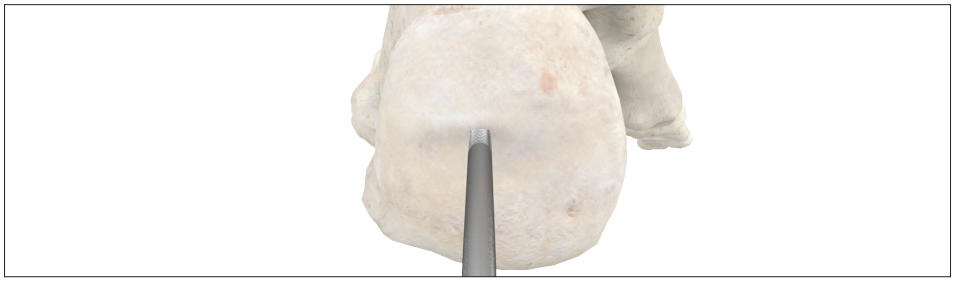

Guide wire insertion – posterior view

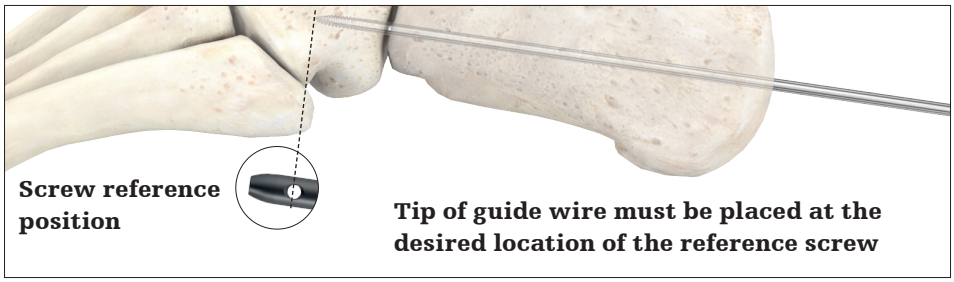

Guide wire insertion – lateral view

⚠ CAUTION

- **Position the guide wire targeter on the bone to define the correct guide wire trajectory.**
- **The tip of the guide wire must be placed at the desired location of the reference screw in order to estimate the nail length correctly with the guide wire ruler.**

⚠ WARNING

Insertion of the guide wire must be performed under fluoroscopic control in order to guarantee the adequate centering and tip positioning in the bone.

Note: If you are performing both medial and lateral column procedures, it is recommended to stabilize and fix the lateral side with a guide wire as proposed on the lateral procedure (on page 41, where lateral column procedure begins) before performing the medial operation.

Operative technique
Lateral column procedure

Estimation of nail length

Estimate nail length by utilizing the guide wire ruler. Ensure bony apposition before measuring and that the guide wire ruler rests firmly against the calcaneus. **Advance the guide wire at least 20mm deeper into the cuboid.**

Final determination of nail length will be made during reaming.

⚠ CAUTION

- **Insufficient over-insertion of the guide wire after length measurement could lead to guide wire back out during reaming.**
- **When using the guide wire ruler, ensure that it is in contact with the bone. The guide wire ruler must be used before using any opening drill or reamer.**
- **Inadequate guide wire insertion depth could lead to insufficient stability or soft tissue / bone damage. Therefore fluoroscopy is recommended.**
- **Do not use the crown drill in lateral column to avoid soft tissue damage.**
- **When the guide wire extends past the guide wire ruler it means that the foot is too small to fit the shortest available nail.**

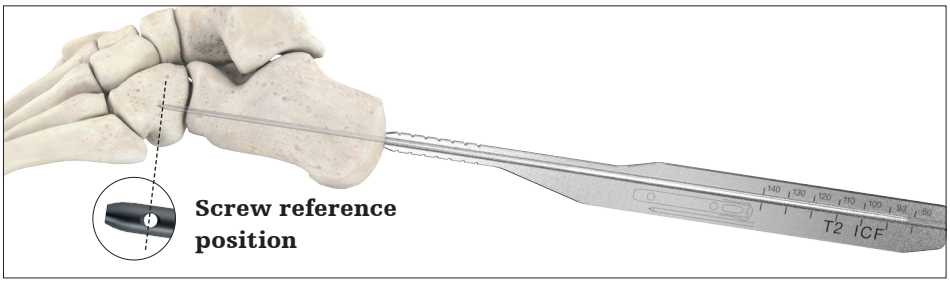

Estimation of nail length using guide wire ruler - lateral view

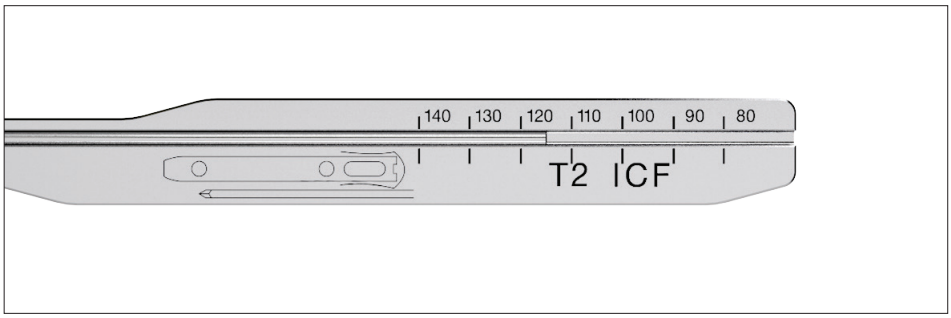

In this example, nail length is estimated at 120

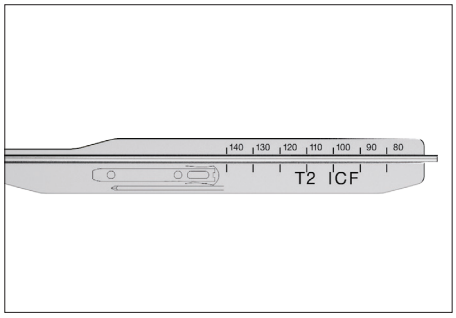

In this example, the smallest nail available is still too long for this patient

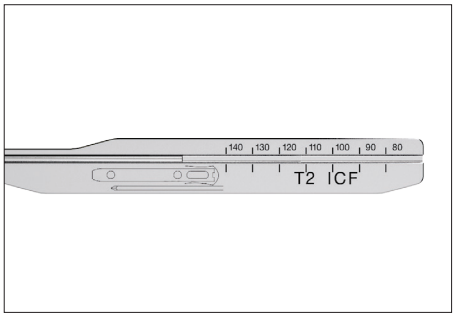

In this example, the longest nail available is too short for this patient; however, an end cap could be added for additional length

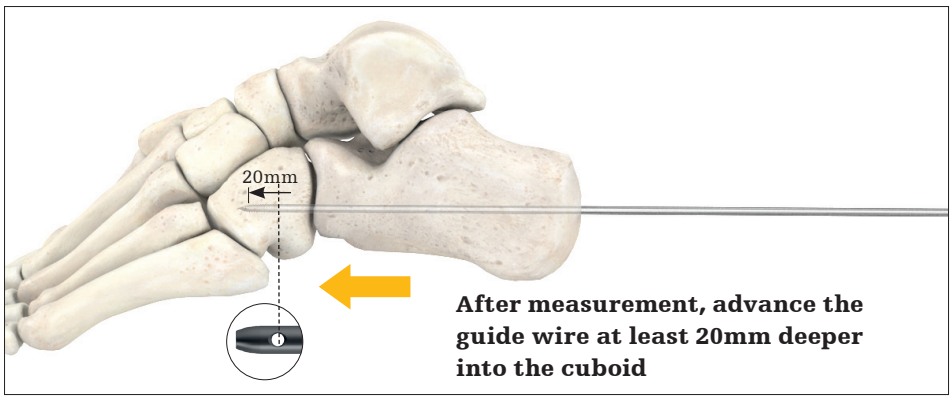

Guide wire advancement 20mm past reference screw

Operative technique
Lateral column procedure

Drilling / reaming

Use an opening drill until the notch is at the desired position of the reference screw (to ensure you have reached the desired depth).

Please refer to information on page 23 regarding notches which help determine adequate reaming depth.

Then using a reamer, while maintaining the guide wire in position using the guide wire pusher, ream the lateral foot column using power to the desired diameter.

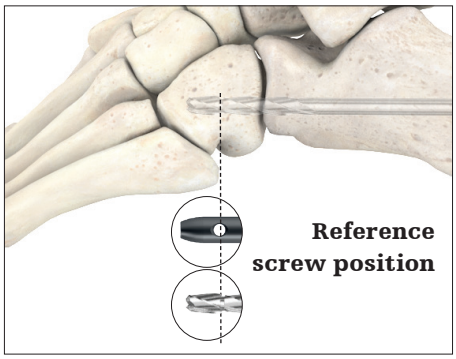

Drilling

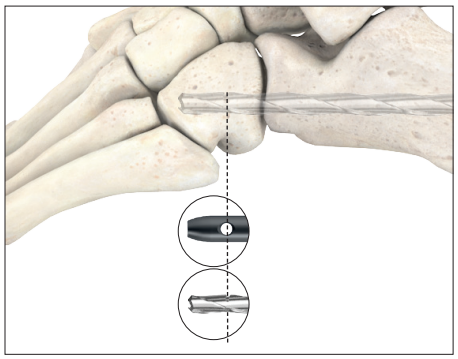

Reaming

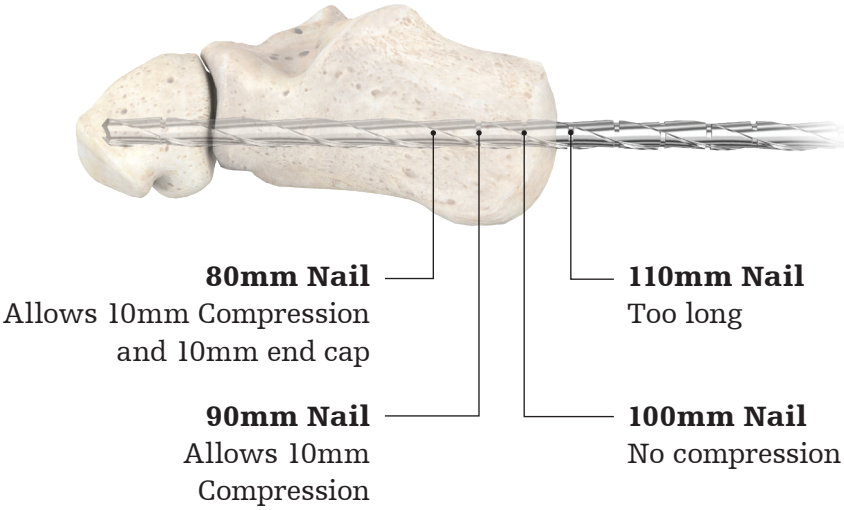

⚠ CAUTION

- **High rotational speed during drilling / reaming and guide wire insertion may lead to increased heat generation.**
- **Use guide wire pusher to avoid guide wire backout during reaming.**

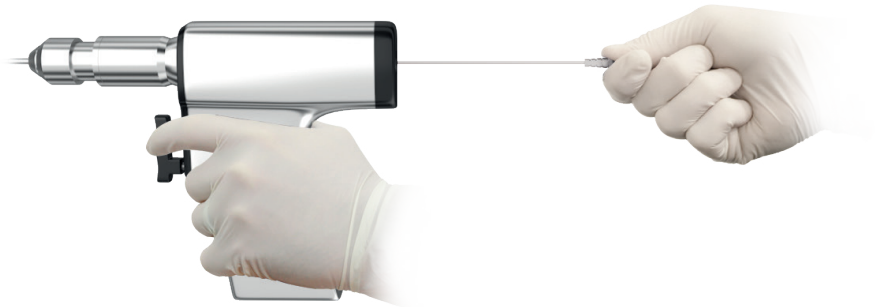

Guide wire pusher

Operative technique

Lateral column procedure

Using fluoroscopy, gradually ream with the 6.5mm and 7.5mm reamers. Continue using fluoroscopy with the 8.5, 9.5, and 10.5mm reamers to assess the remaining cortex thickness and avoid bone damage due to over-reaming.

It is recommended to choose a nail with a diameter 0.5mm smaller than the reamer.
Pay attention to chattering (contact with cortex) when defining the maximum diameter acceptable for the patient.
In order to determine the required nail length, leave the last reamer in with the notch at the location of the reference screw and count the shaft notches until the desired length is reached.

⚠ WARNING

- **The smallest offered nail diameter is 8.0mm. The bones (especially the metatarsals) of the patient must be large enough to allow a corresponding reaming up to a diameter of 8.5mm.**
- **Use fluoroscopy to assess the remaining cortex thickness and avoid bone damage due to over-reaming.**
- **Inadequate nail diameter selection (based on reamer diameter) could cause e.g. Bone damage or poor fixation. Use of fluoroscopy is advised.**

⚠ WARNING

- **When using the reamer, make sure of proper bone apposition prior to length measurement and pay close attention to joint spaces.**
- **The length determined using the notches on the reamer corresponds to a nail without compression. Select a shorter nail if compression is required. (Consider e.g. the required amount of compression).**

Operative technique

Lateral column procedure

Target device assembly and nail unpackaging

Please refer to the medial column procedure for target device assembly and nail unpackaging (pages 24 through 27).

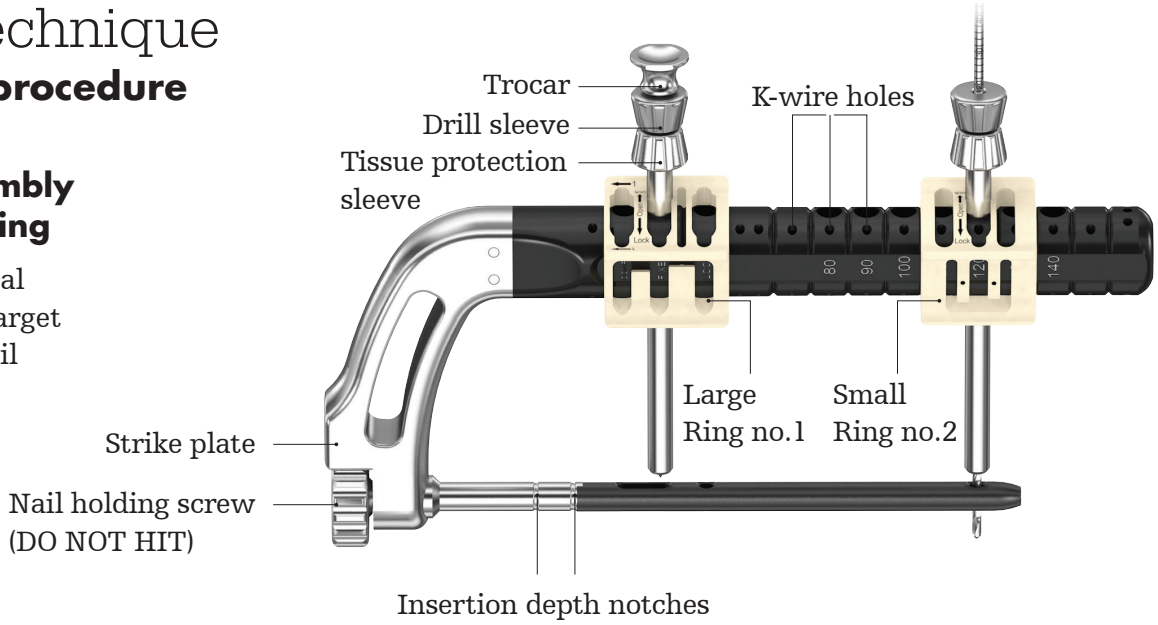

Nail insertion

Insert the nail into the lateral column using the targeting device. Final placement depends solely on the positioning of the reference screw hole in the cuboid. Gentle blows can be delivered on the dedicated strike plate of the targeting device.

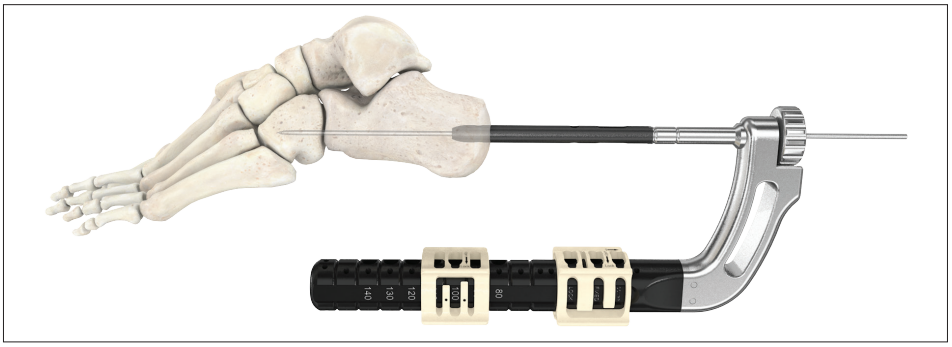

Nail insertion over guide wire

⚠ CAUTION

- **After insertion of the nail, use fluoroscopy to ensure that the nail length chosen is correct and that there is enough room to apply compression.**
- **The nail holding screw must not be hit at any time during the operation.**

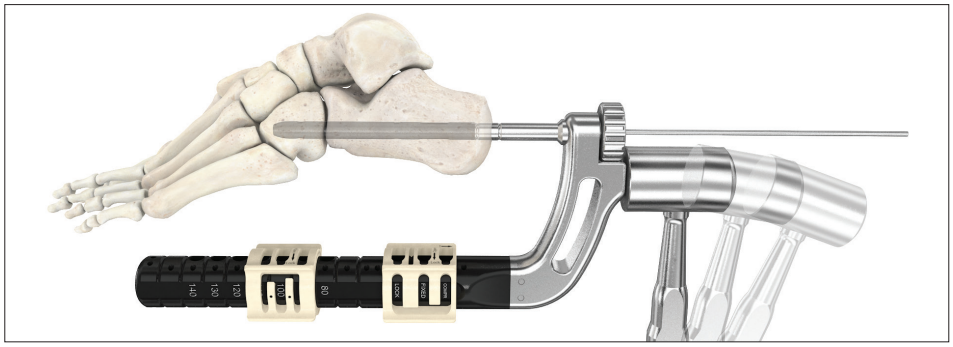

Hammering strike plate slightly for nail insertion

⚠ WARNING

- **Remove the guide wire from the cannulated nail before drilling transverse holes.**

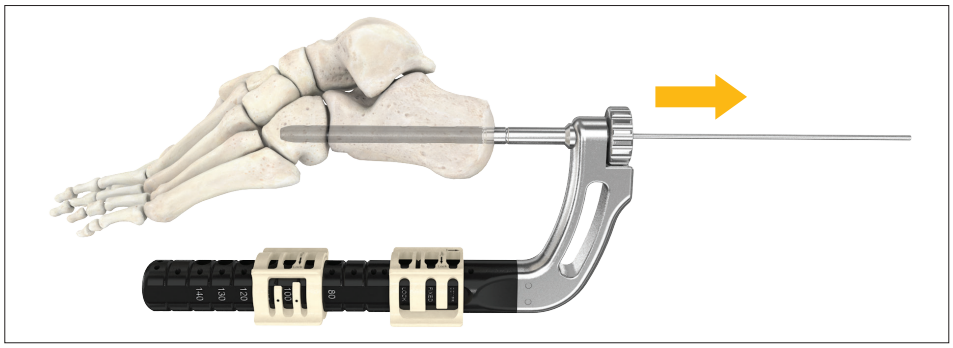

Guide wire removal

Operative technique
Lateral column procedure

Reference screw insertion

Ensure that the small locking ring (ring no.2) is still in the position corresponding to the chosen nail length. Then insert the sleeve system in the targeting arm in the hole corresponding to the cuboid screw of the selected nail. Inserting the sleeve system will help indicate the angulation of the transverse screws.

Using the second sleeve system Ring no.1 helps with checking screw trajectory and angulation.

Proceed by making a small skin incision at the tip of the trocar which defines the cuboid screw so that the sleeve system can be placed directly on the bone. When the trocar is pushed back, the sleeve system is in contact with the bone. Lock the ring and remove the trocar.

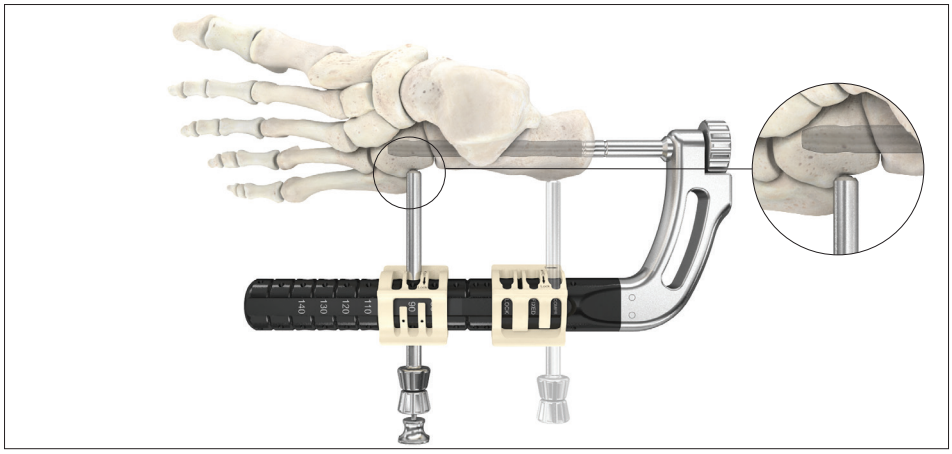

Sleeve system insertion

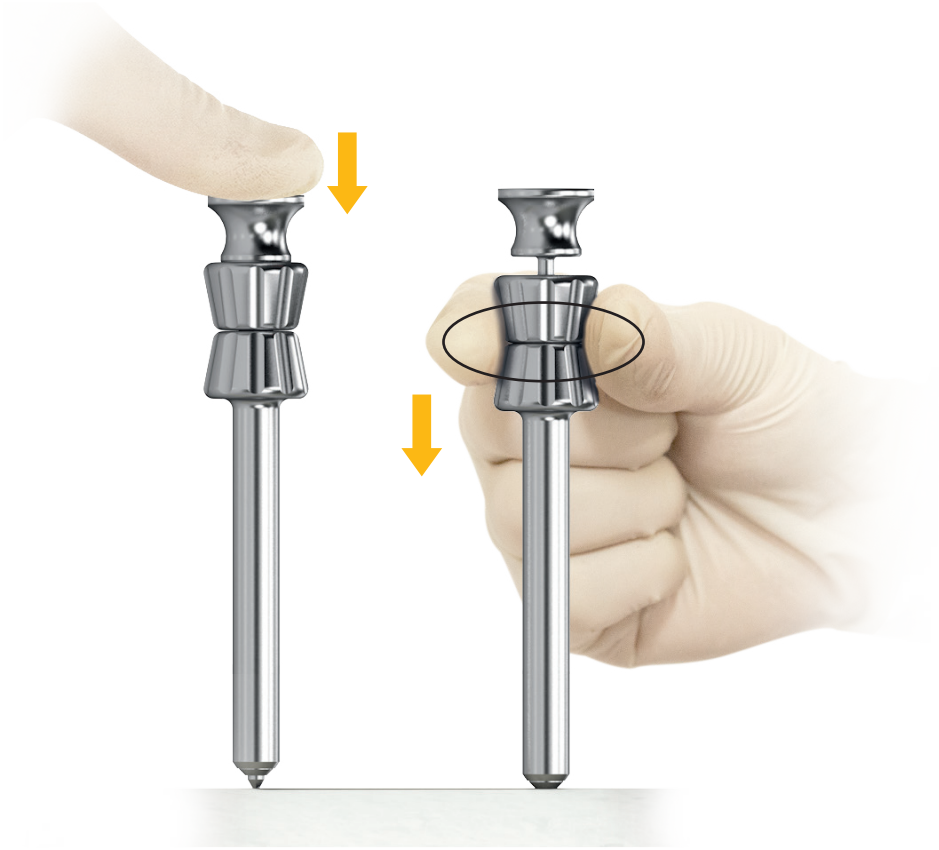

No bone sleeve contact **Bone sleeve in contact**

Operative technique

Lateral column procedure

⚠ CAUTION

- **Ensure the locking ring is in locked position before drilling.**
- **Do not apply excessive torque on instruments to avoid mis-drilling.**
- **Use fluoroscopy to monitor drilling depth.**

1. Secure the position of the targeting device with a K-wire.
2. Drill through both cortices with the 2.6mm scaled drill bit. If you are measuring screw length with the drill bit, leave drill bit in and measure as explained on page 49, option 1.

The position of the tip of the drill as it relates to the far cortex is equal to where the tip of the screw will end. Therefore, if the tip of the drill is 1mm beyond the far cortex, the tip of the screw will also be 1mm beyond.

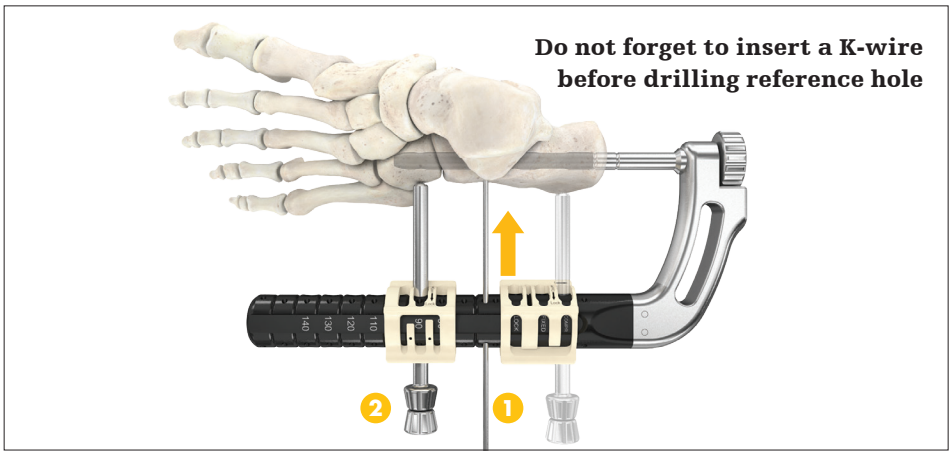

1) K-wire insertion and 2) Reference hole drilling

Position of drill tip **Position of screw tip**

Operative technique

Lateral column procedure

⚠ CAUTION

Make sure that the assembly of tissue protection sleeve and drill sleeve is seated on bone prior to selecting final screw length.

Measure the required screw length. This can be measured in several ways:

1) Measure directly on the drill using the scale read at the end of the drill sleeve
2) Without moving the drill, measure by loosening the drill sleeve from the tissue protection sleeve and sliding it along the drill until it hits the shoulder of the drill
3) Measure by inserting screw depth gauge through the tissue protection sleeve; place the hook at the far cortex and read the length measurement at the end of the tissue protection sleeve

The screw depth gauge is calibrated so that when the hook is pulled back flush with the far cortex, the screw tip will end 1mm beyond the far cortex.

⚠ CAUTION

When measuring screw length, make sure that the hook is pulled back flush with the far cortex.

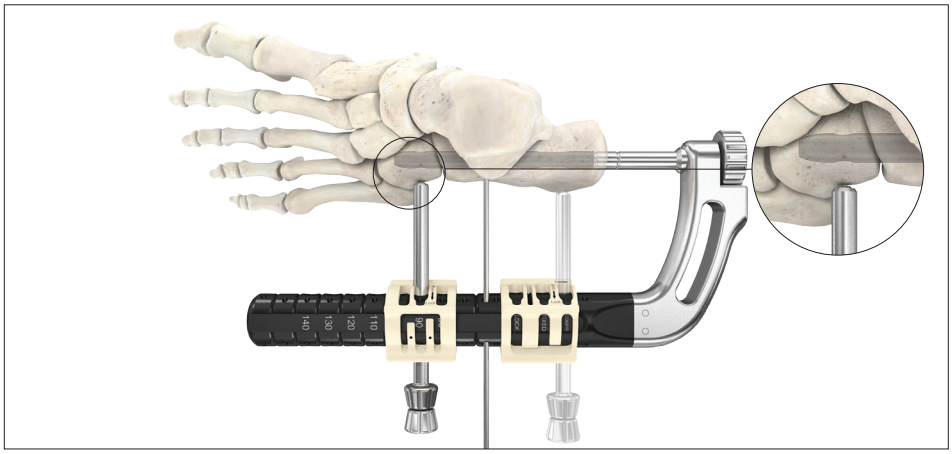

Sleeve system insertion

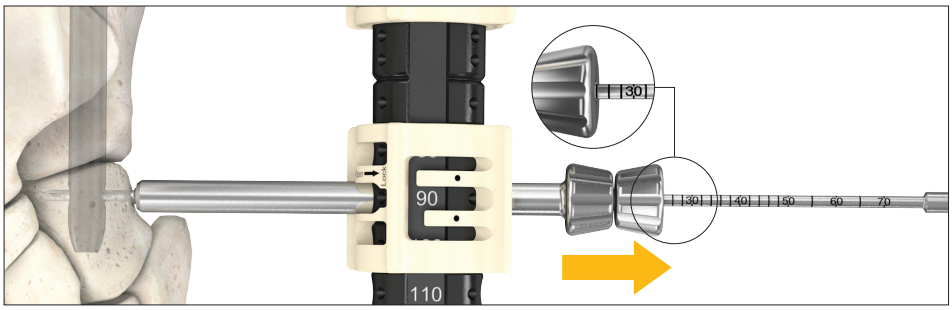

Screw measurement using drill bit

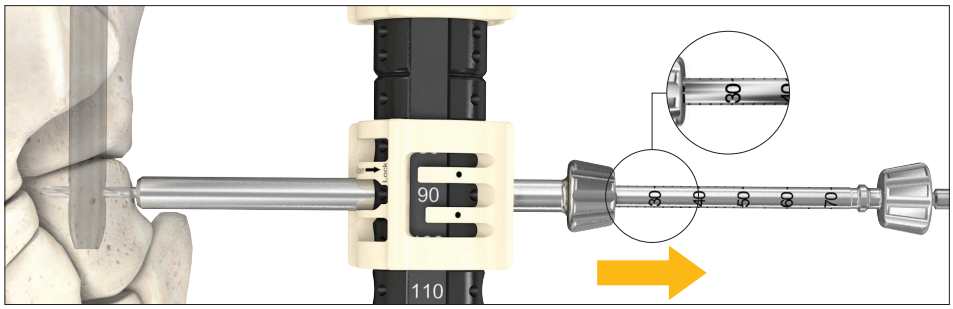

Screw measurement using drill sleeve

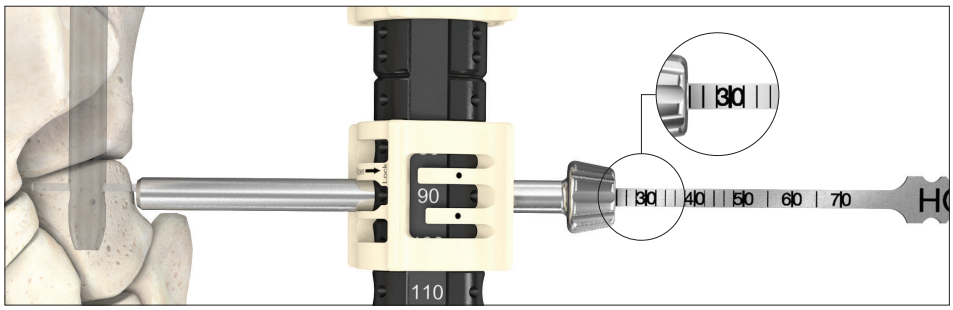

Screw measurement using depth gauge

Operative technique

Lateral column procedure

After removing the drill sleeve, insert the appropriate screw with the T10 screwdriver. When seated properly, the screw will be flush with the cortical surface of the bone. The laser marking on the T10 screwdriver will be flush with the end of the tissue protection sleeve when the screw is fully seated.

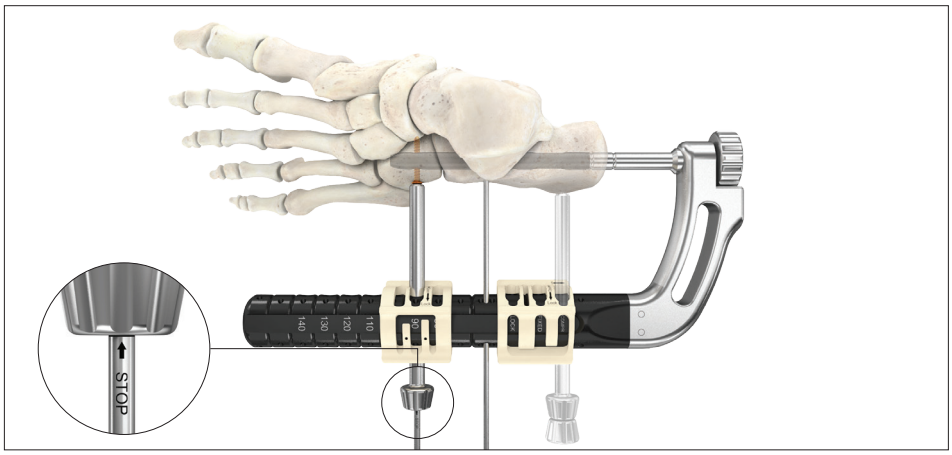

Reference screw insertion

After insertion of the screw, remove any K-wire from the targeting device before attempting to apply apposition / compression.

⚠ WARNING

- **Screw insertion must be carried out carefully and under fluoroscopic control to avoid over-insertion of the screw through the cortex.**

⚠ CAUTION

- **Remove any K-wire from targeting device before attempting to apply apposition / compression.**

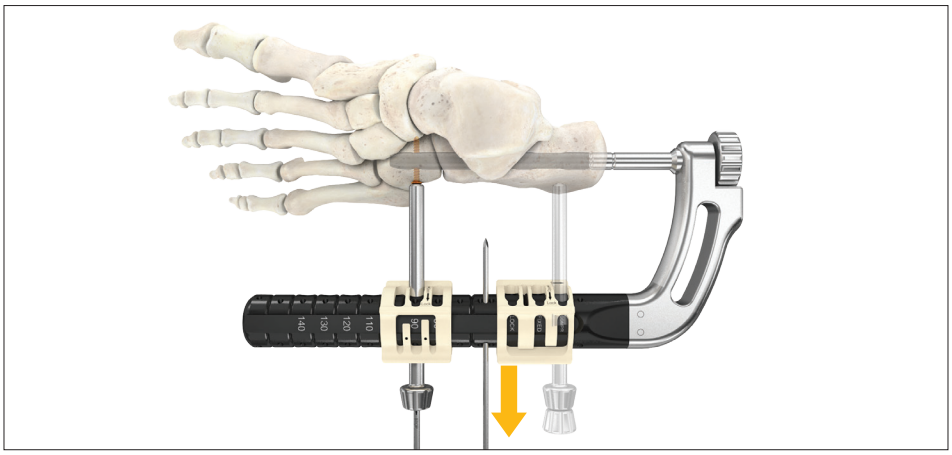

Guide wire removal

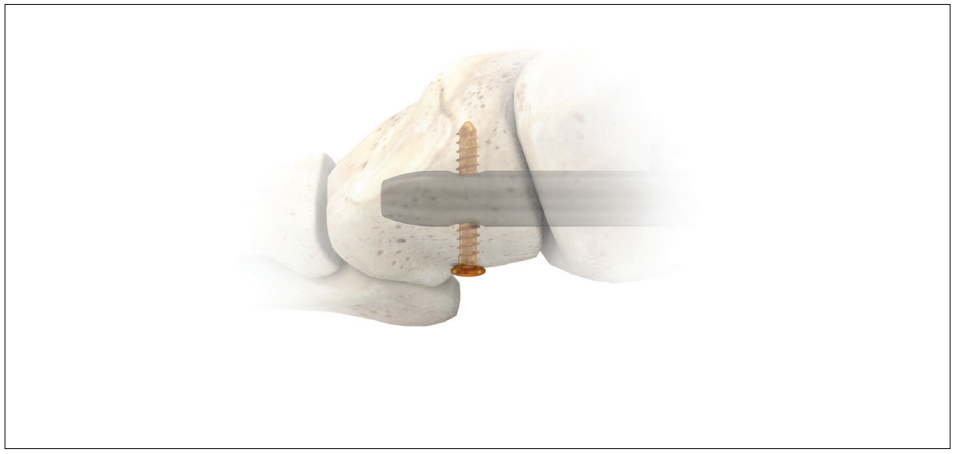

Final position of screw

Operative technique

Lateral column procedure

Screw insertion without compression can be found on page 54.

Screw insertion in case of compression

Insert the sleeve system in the targeting arm in the hole corresponding to the compression state "COMPR", on Ring 1.

Make a small skin incision at the tip of the trocar so that the sleeve system can be placed directly on the bone; when the trocar is pushed back, the sleeve system is in contact with the bone. Then, lock the ring.

Drill through both cortices with the 2.6mm scaled drill bit, ensuring sleeve system remains in contact with the bone; If you are measuring screw length with the drill, leave the drill in and measure as explained on page 49, option 1.

⚠ WARNING

- **Confirm adequate alignment and apposition of all the bones of the column before drilling the hole corresponding to the second screw.**

⚠ CAUTION

- **Ensure the locking ring is in locked position before drilling.**
- **Do not apply excessive torque on instruments to avoid mis-drilling.**

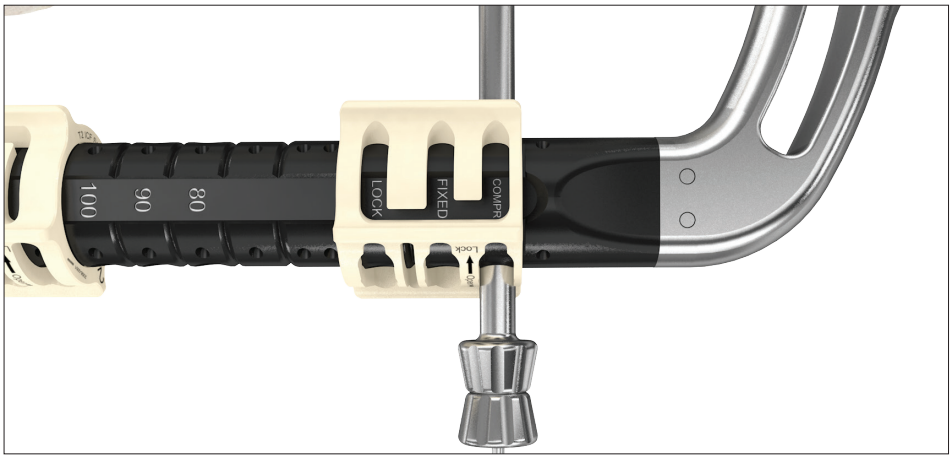

Sleeve insertion in the "COMPR" hole

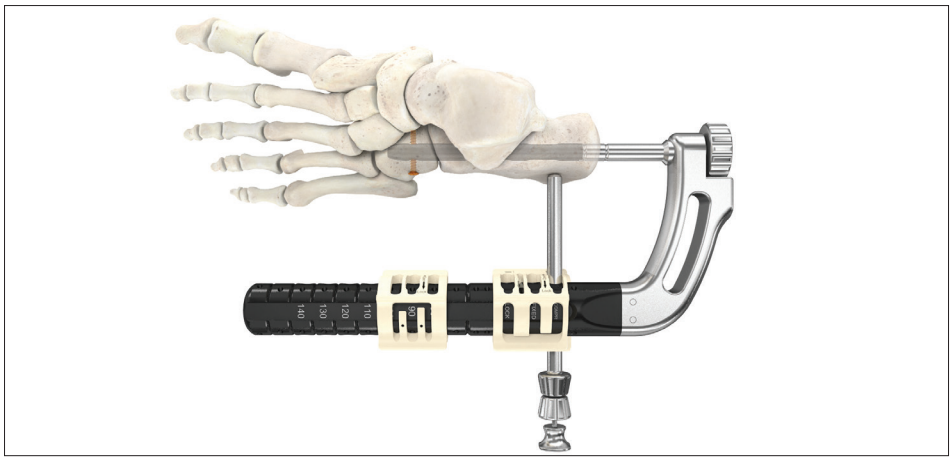

Locking of Ring 1

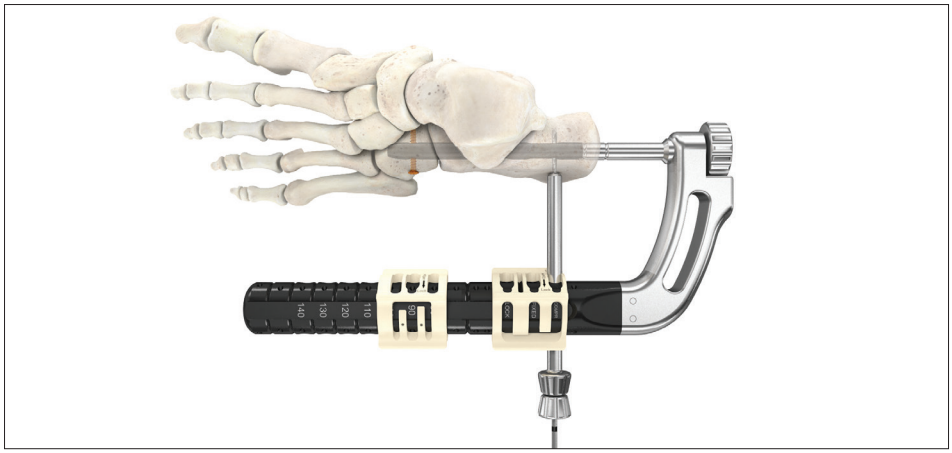

Drilling in "COMPR" hole

Operative technique

Lateral column nail

Measure the required screw length as mentioned on page 49. Insert the appropriate screw with the T10 screwdriver. When seated properly, the screw will be flush with the cortical surface of the bone. The laser marking on the screwdriver will be flush with the end of the tissue protection sleeve when the screw is fully seated.

⚠ WARNING

- **Screw insertion must be carried out carefully and under fluoroscopic control to avoid over-insertion of the screw through the cortex.**
- **Apposition / compression must be carried out carefully and under fluoroscopy control to avoid over compression.**

⚠ WARNING

First screw must be inserted in the reference hole and the second screw in the COMPR position prior to applying active, controlled apposition / compression.

Compress the joints with the compression screw using the T10 screwdriver through the nail holding screw. A maximum of 10mm of compression can be applied.

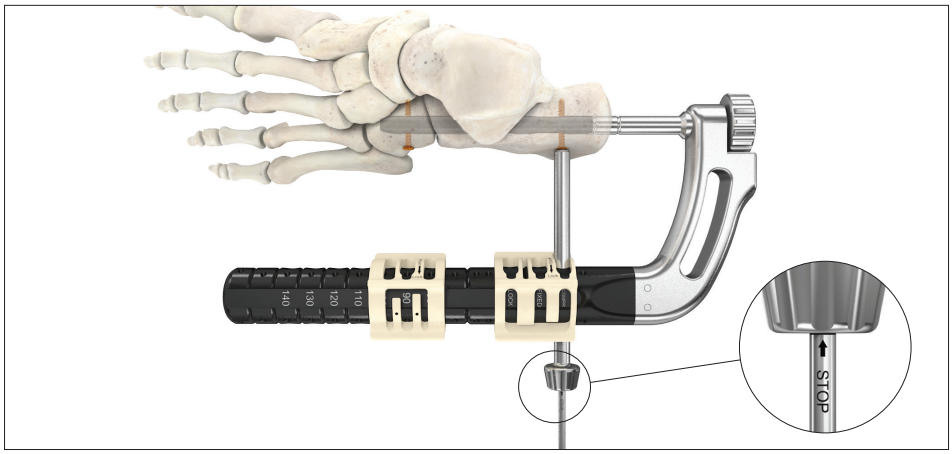

Screw insertion in the "COMPR" hole

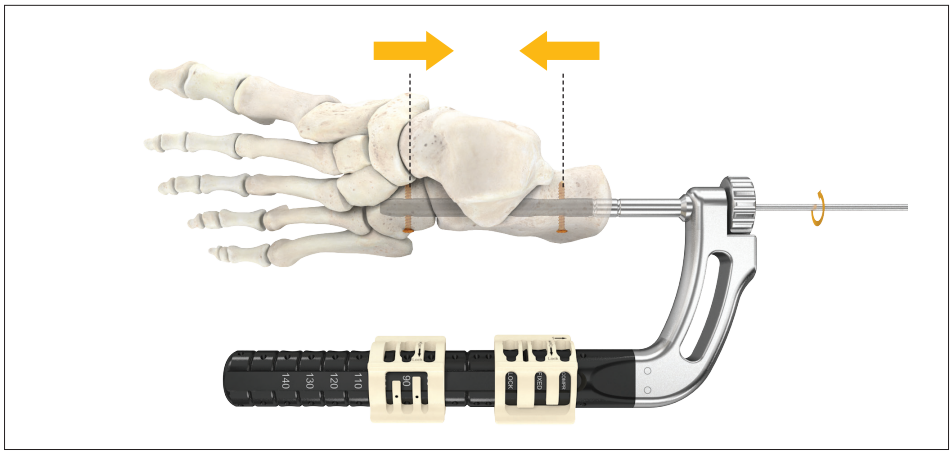

Compression of joints with compression screw

Advancement of compression screw

Screw position after compression is applied

Operative technique

Lateral column nail

Final screw insertion (if compression was applied)

Move sleeve system to the “LOCK” position on the targeting device, on Ring 1. Make a small skin incision at the tip trocar so that the sleeve system can be placed directly on the bone. When the trocar is pushed back, the sleeve is in contact with the bone.
Lock the ring. After removing the trocar, drill through both cortices with the 2.6mm scaled drill bit, ensuring sleeve system remains in contact with the bone; if you are measuring screw length with the drill, leave the drill in and measure as explained on page 49, option 1. Measure the required screw length as mentioned on page 49. After removing the drill sleeve, insert the appropriate screw with the T10 screwdriver. When seated properly, the screw will be flush with the cortical surface of the bone. The laser marking on the T10 screwdriver will be flush with the end of the tissue protection sleeve when the screw is fully seated.

⚠ CAUTION

- **Ensure the locking ring is in locked position before drilling.**
- **Do not apply excessive torque on instruments to avoid mis-drilling.**

⚠ WARNING

- **Screw insertion must be carried out carefully and under fluoroscopic control to avoid over-insertion of the screw through the cortex.**

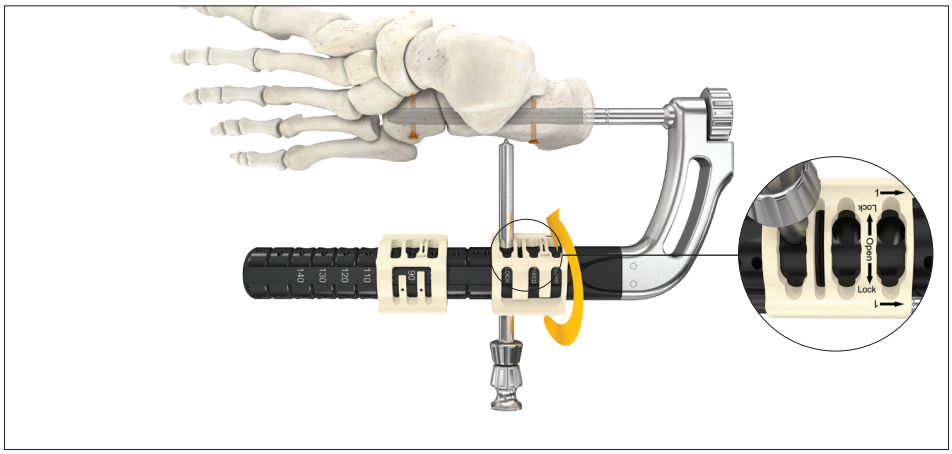

Sleeve system insertion in "LOCK" position and locking of Ring 1

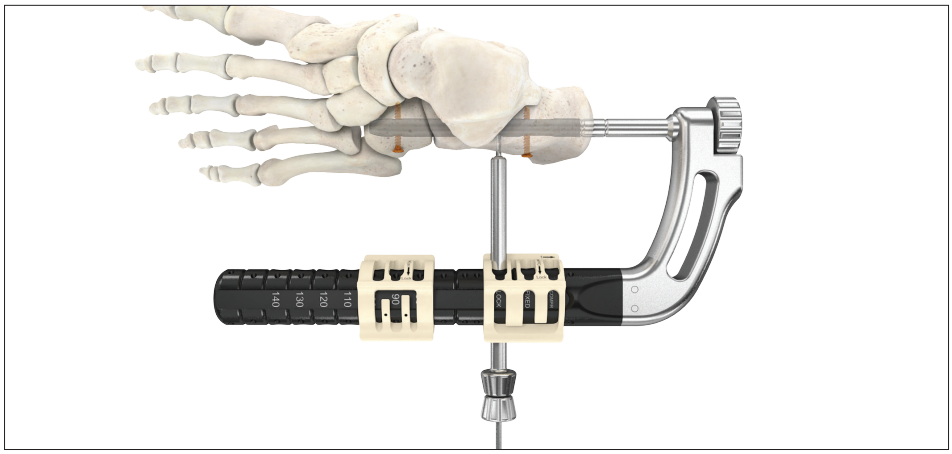

Drilling in locking hole

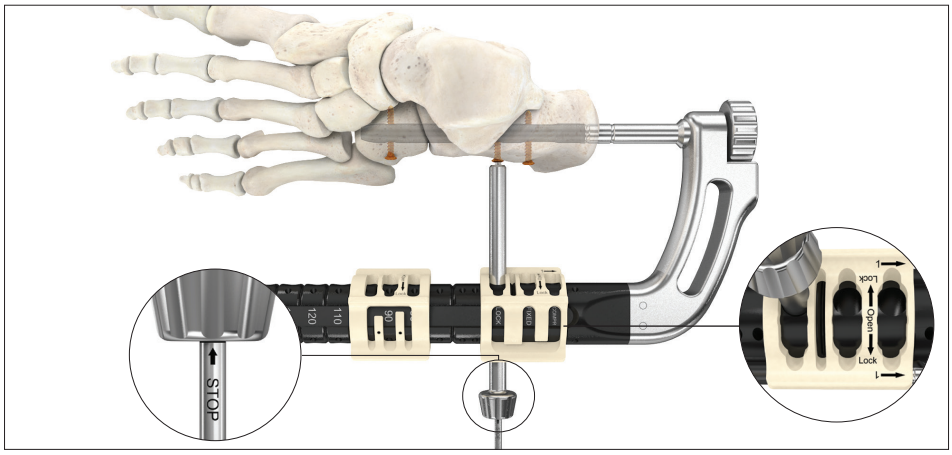

Screw insertion in the locking hole

Operative technique
Lateral column nail

Screw insertion without compression

If no compression is needed, place the sleeve system in the "LOCK" position on Ring 1 while manually ensuring good bone apposition.

Make a small skin incision at the tip of the trocar so that the sleeve system can be placed directly on the bone; when the trocar is pushed back, the sleeve system is in contact with the bone. Then, lock the ring.

After removing the trocar, drill through both cortices with the 2.6mm scaled drill bit, ensuring sleeve system remains in contact with the bone; If you are measuring screw length with the drill, leave the drill in and measure as explained on page 49, option 1.

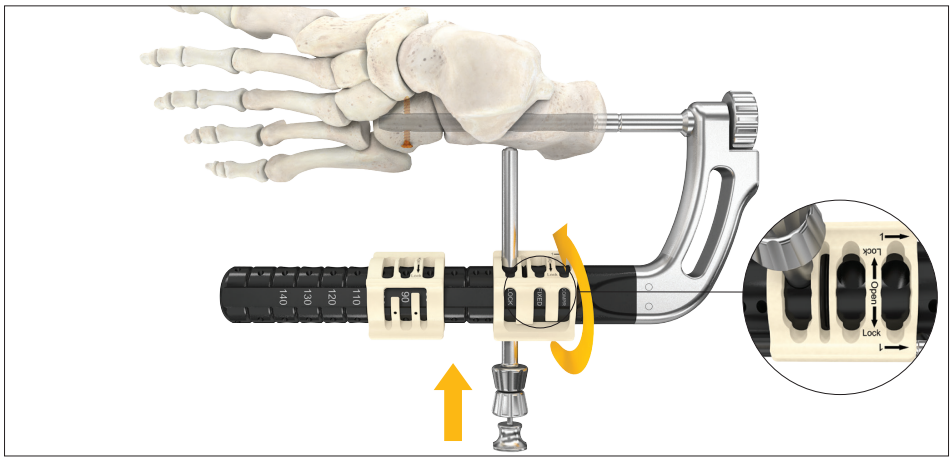

Sleeve system insertion in "LOCK" position

⚠ WARNING

- **Confirm adequate alignment and apposition of all the bones of the column before drilling the hole corresponding to the second screw.**

⚠ CAUTION

- **Ensure the locking ring is in locked position before drilling.**
- **Do not apply excessive torque on instruments to avoid mis-drilling.**

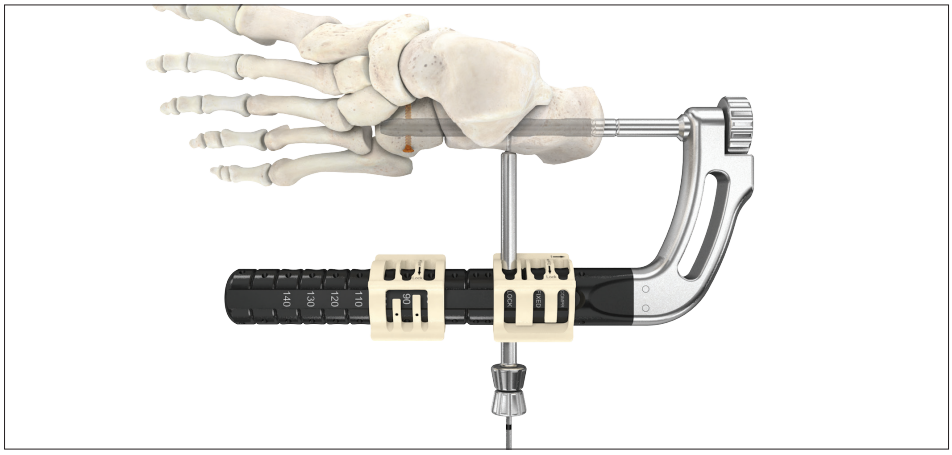

Drilling

Operative technique

Lateral column nail

Measure the required screw length as mentioned on page 49. After removing the drill sleeve, insert the appropriate screw with the T10 screwdriver. When seated properly, the screw will be flush with the cortical surface of the bone. The laser marking on the T10 screwdriver will be flush with the end of the tissue protection sleeve when the screw is fully seated.

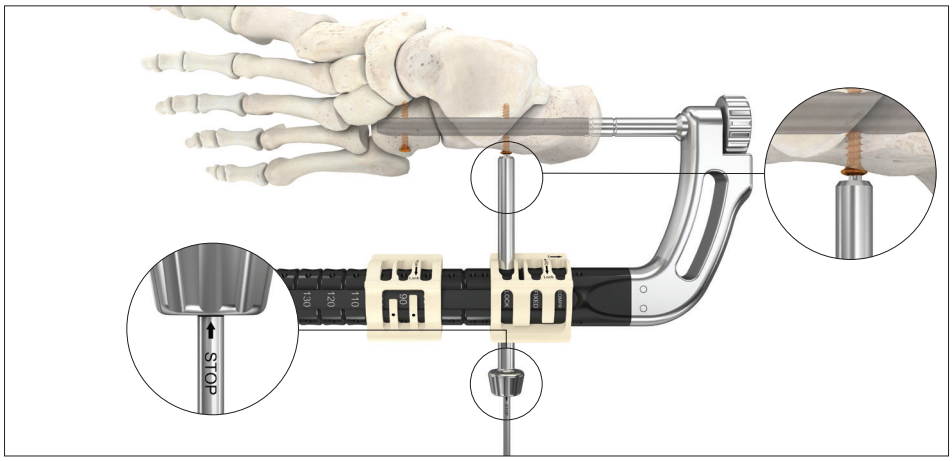

Locking hole screw placement

⚠ WARNING

- **Screw insertion must be carried out carefully and under fluoroscopic control to avoid over-insertion of the screw through the cortex.**
- **Apposition / compression must be carried out carefully and under fluoroscopy control to avoid over compression.**

Final screw insertion (if no compression was applied)

Move the sleeve system to the “FIXED” position on the targeting device on Ring 1.

Make a small skin incision at the tip trocar so that the sleeve system can be placed directly on the bone. When the trocar is pushed back, the sleeve is in contact with the bone. Lock the ring.

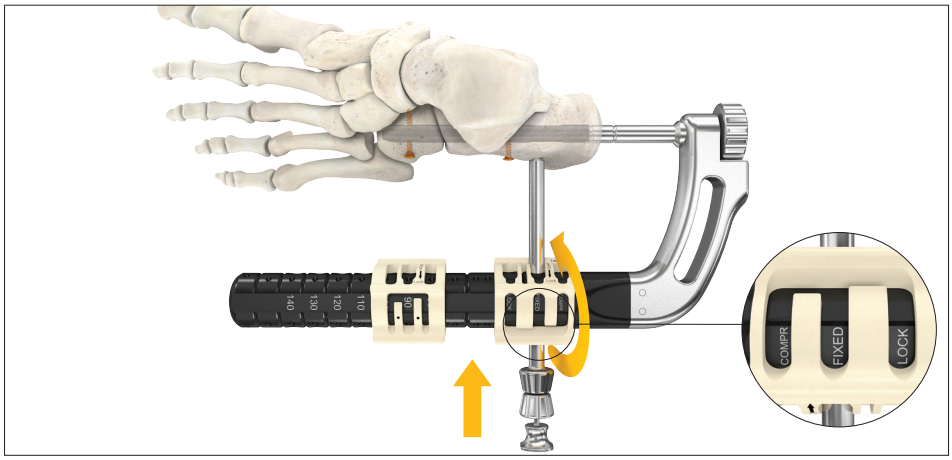

Sleeve system insertion in "FIXED" position

Operative technique

Lateral column nail

After removing the trocar, drill through both cortices with the 2.6mm scaled drill bit, ensuring sleeve system remains in contact with the bone; if you are measuring screw length with the drill, leave the drill in and measure as explained on page 49, option 1.

⚠ CAUTION

- **Ensure the locking ring is in locked position before drilling.**

⚠ WARNING

- **Screw insertion must be carried out carefully and under fluoroscopic control to avoid over-insertion of the screw through the cortex.**

Measure the required screw length as mentioned on page 49. After removing the drill sleeve, insert the appropriate screw with the T10 screwdriver. When seated properly, the screw will be flush with the cortical surface of the bone. The laser marking on the T10 screwdriver will be flush with the end of the tissue protection sleeve when the screw is fully seated.

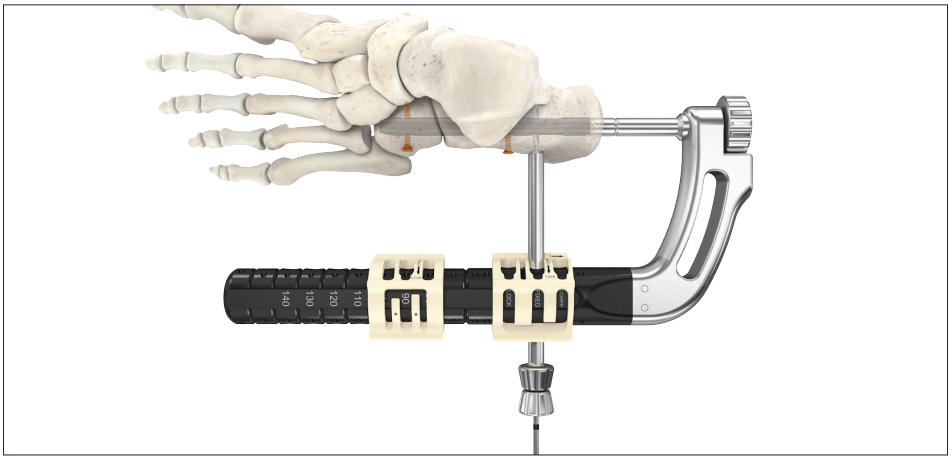

Drilling in fixed hole

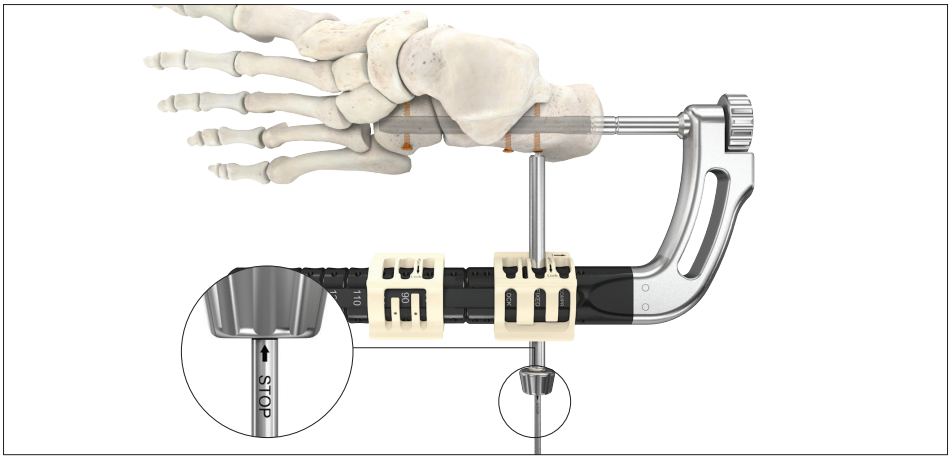

Screw insertion

Operative technique
Lateral column nail

Disassembly of the targeting arm and end cap insertion

Loosen the nail holding screw until the nail is completely released. If necessary, the T10 screwdriver can be used to loosen the nail holding screw.

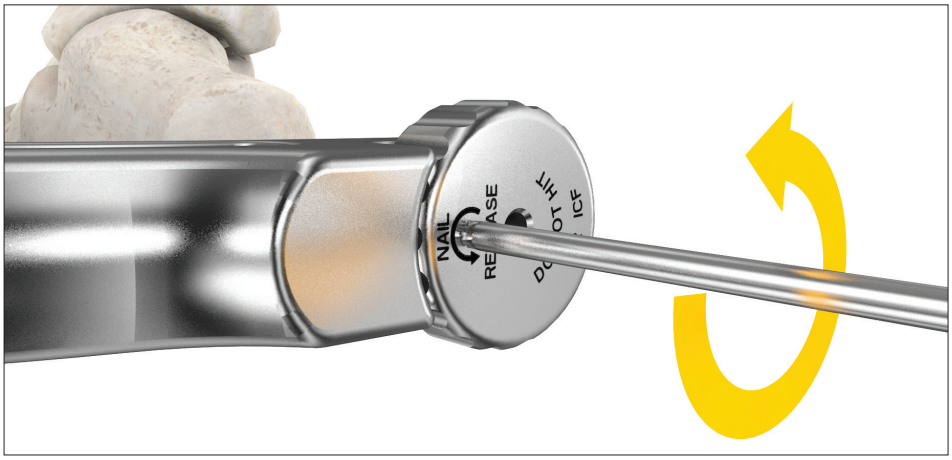

Nail holding screw loosening

Remove the targeting arm.

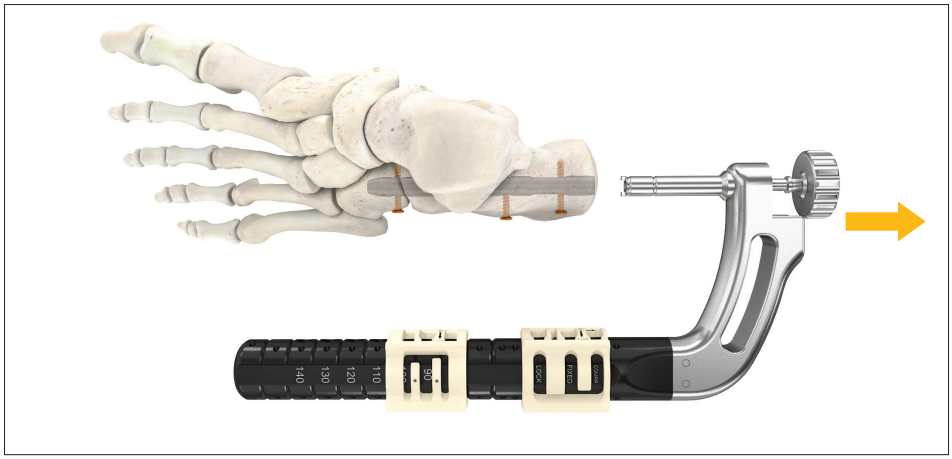

Removal of targeting arm

Insert the guide wire ruler and measure the require end cap length using the scale on the back of the guide wire ruler, additionally, there are notches that are visible every 5mm under fluoroscopy.

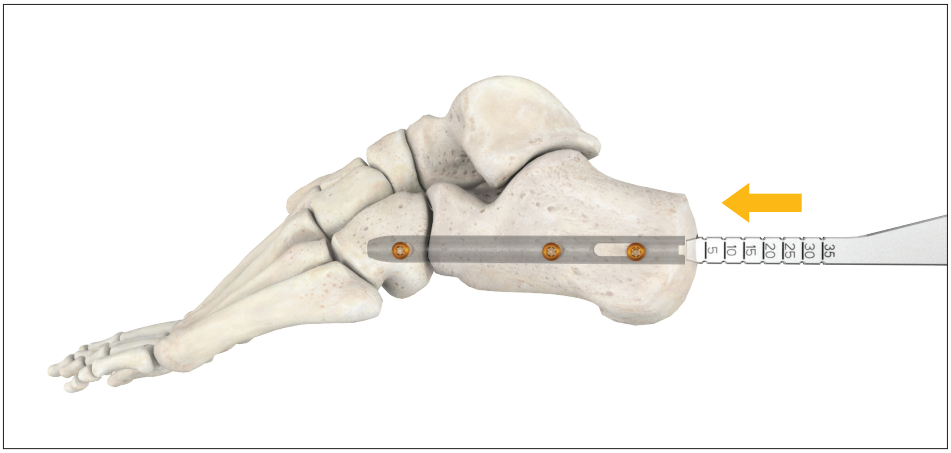

End cap measurement

Operative technique

Lateral column nail

Insert the chosen end cap using the T10 screwdriver blade.

⚠ WARNING

- **It is mandatory to place an end cap in order to prevent unwanted movement of the premounted compression screw.**
- **Under fluoroscopy ensure correct reduction and final implant placement.**

Note: A 0mm end cap will sit flush with the end of the nail and will not lengthen it.

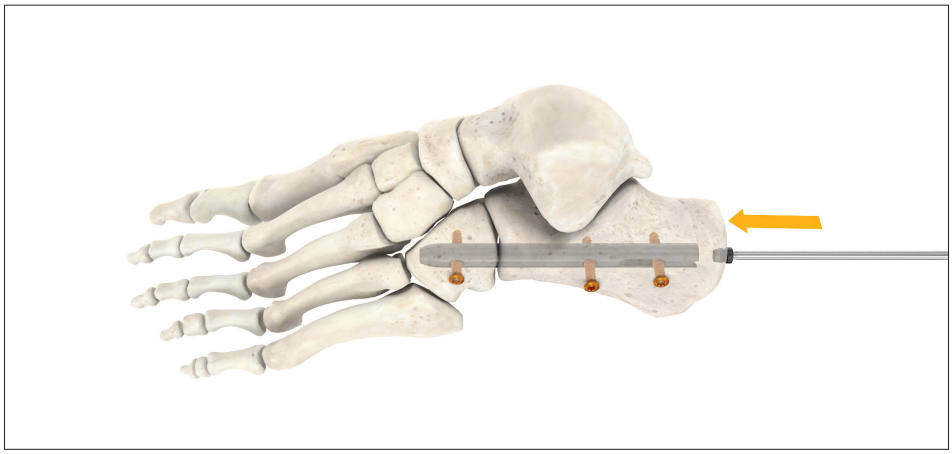

End cap insertion

Addendum

Addendum
Medial column procedure

Implant removal

⚠ WARNING

Ensure the required components for performing the implant removal procedure are available prior to surgery. For more details, please also refer to "Implant Extraction Set" Operative Technique, Content ID: IES-ST-1.

1806-6121
Screwdriver Bit T25

1806-6102
Teardrop handle

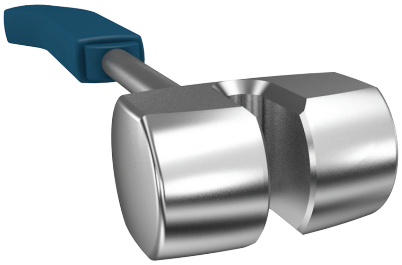

1806-0170
T2 slotted hammer

1806-6139
Nut

1806-6110
Screwdriver bit
conical Hex 4.0mm

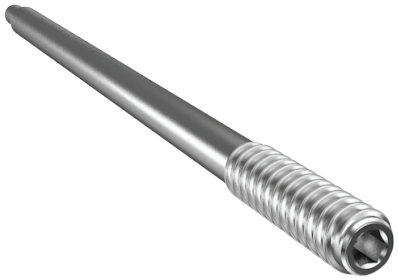

1806-6137
Threaded Rod M5

Addendum
Medial column procedure

Implant removal (optional)

1) Remove the end cap with the T10 screwdriver in the T2 ICF set, or the T25 screwdriver in the nail extraction set

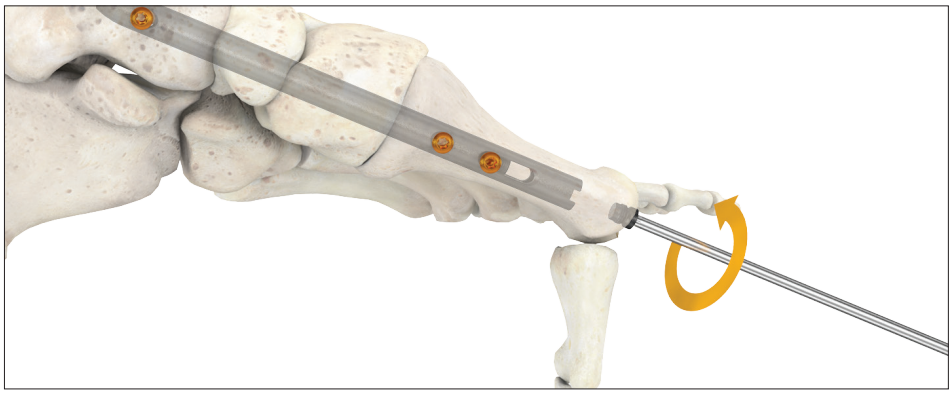

End cap removal

2) Loosen compression screw with T10 screwdriver blade; then remove screw

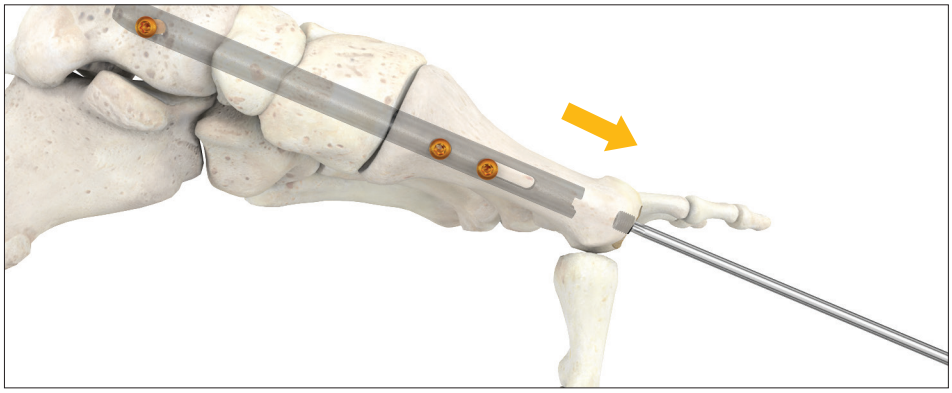

Compression screw removal

3) Tighten nut into the threaded rod from the extraction set

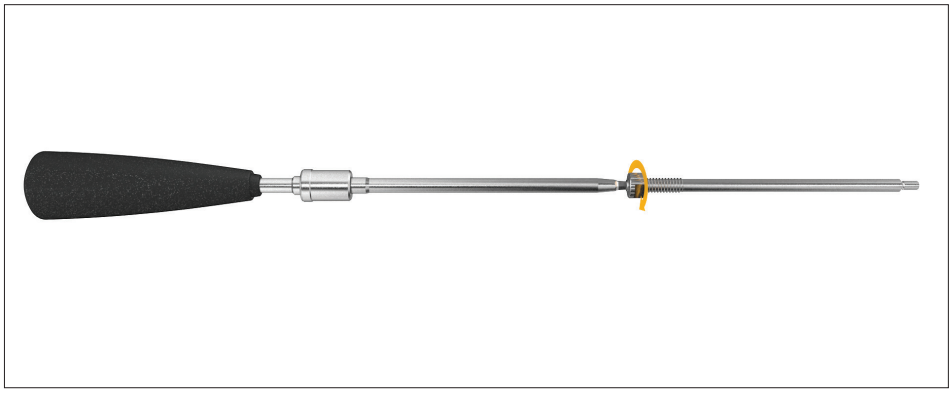

Nut insertion

Addendum

Medial column procedure

4) Tighten threaded rod into the nail. Please note that the threaded rod will connect to the nail even if not all the threads from the rod are engaged with the nail

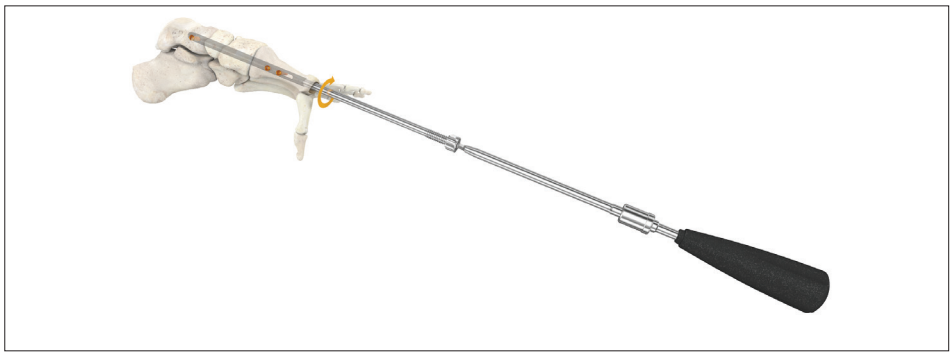

Threaded rod tightening

X-ray of threaded rod engaged with nail

5) Extract transverse screws using the T10 screwdriver blade

NOTICE

Please ensure that the threaded rod is engaged with the nail prior to transverse screw extraction.

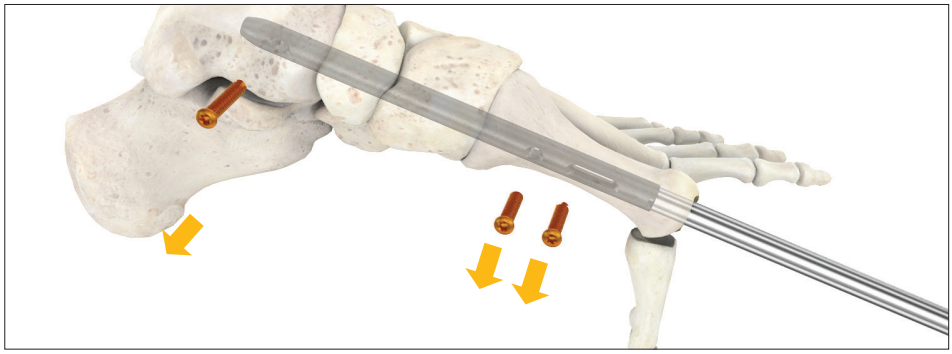

Transverse screw extraction

6) Extract nail using slotted hammer

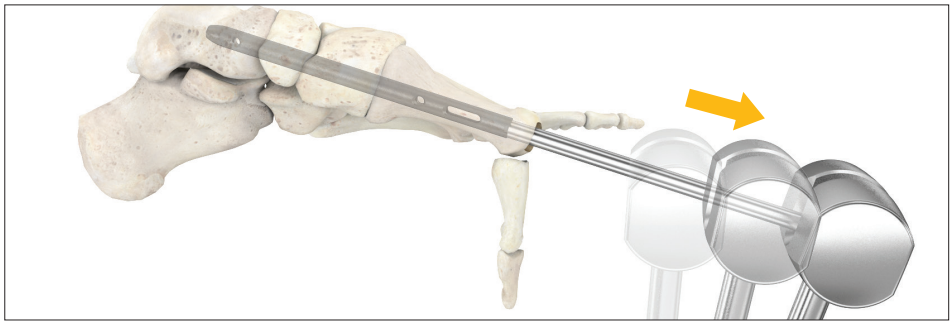

Nail removal

Addendum
Lateral column procedure

Implant removal (optional)

1) Remove the end cap with the T10 screwdriver in the T2 ICF set, or the T25 screwdriver in the nail extraction set

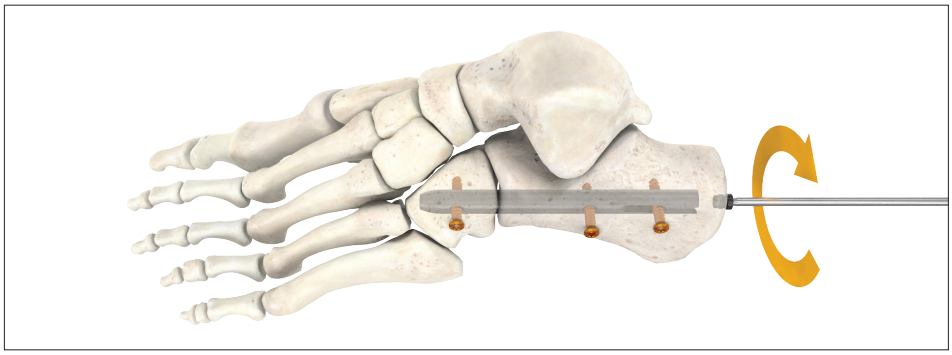

End cap removal

2) Loosen compression screw with T10 screwdriver blade; then remove screw

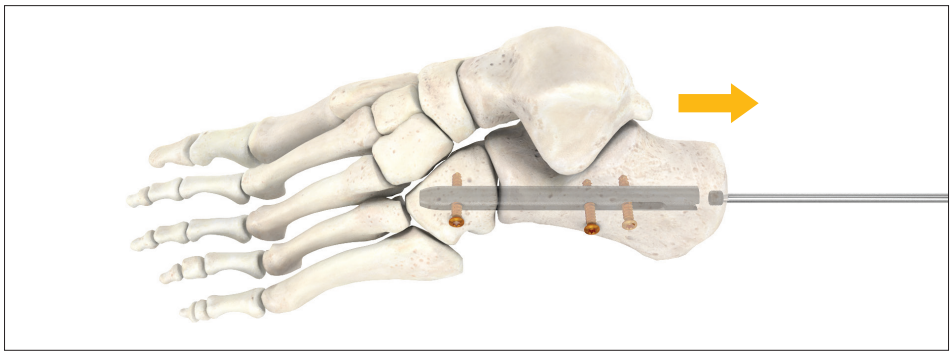

Compression screw removal

3) Tighten nut into threaded rod from the extraction set

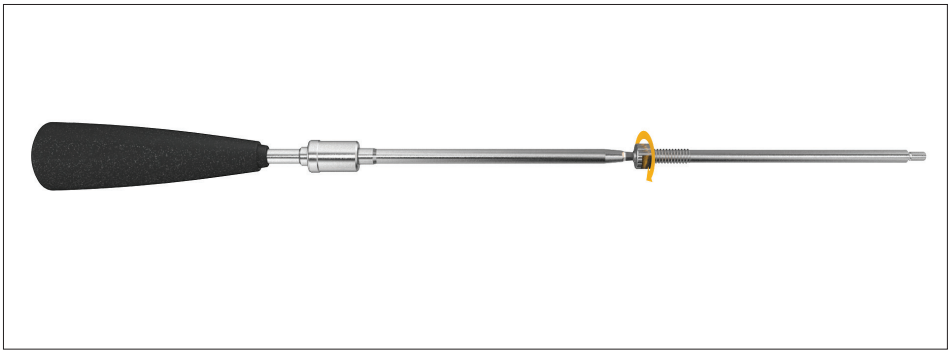

Nut insertion

Addendum

Lateral column procedure

4) Tighten threaded rod into the nail. Please note that the threaded rod will connect to the nail even if not all the threads from the rod are engaged with the nail

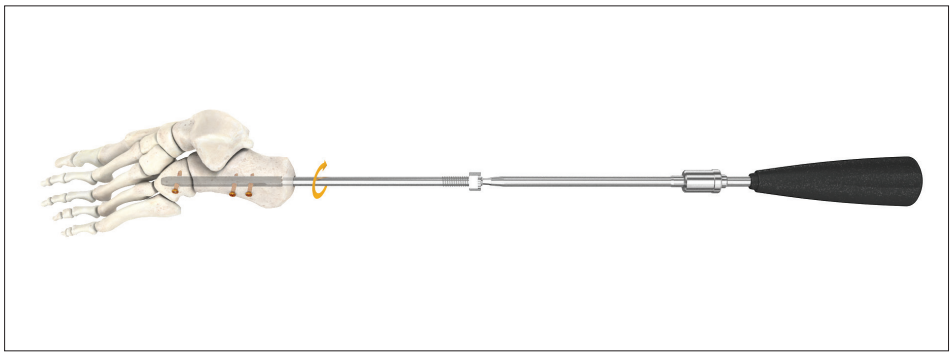

Threaded rod tightening

NOTICE

Please ensure that the threaded rod is engaged with the nail prior to transverse screw extraction.

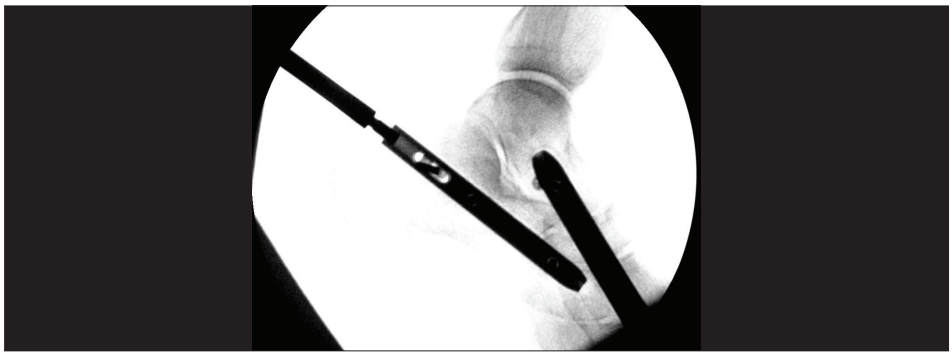

X-ray of threaded rod engaged with nail

5) Extract transverse screws with the T10 screwdriver blade

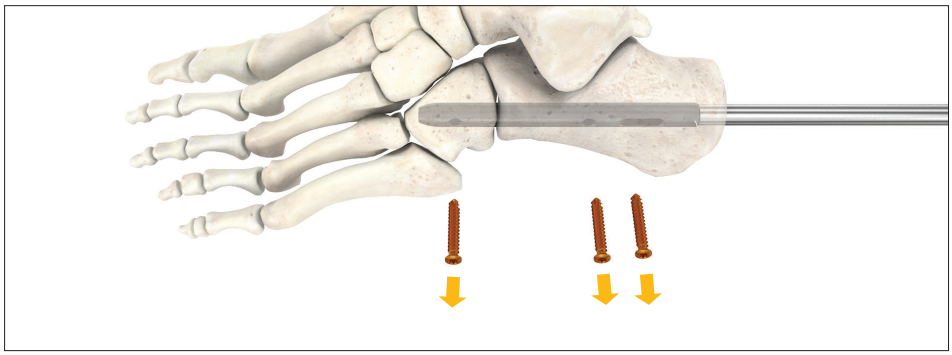

Transverse screw extraction

6) Extract nail using slotted hammer

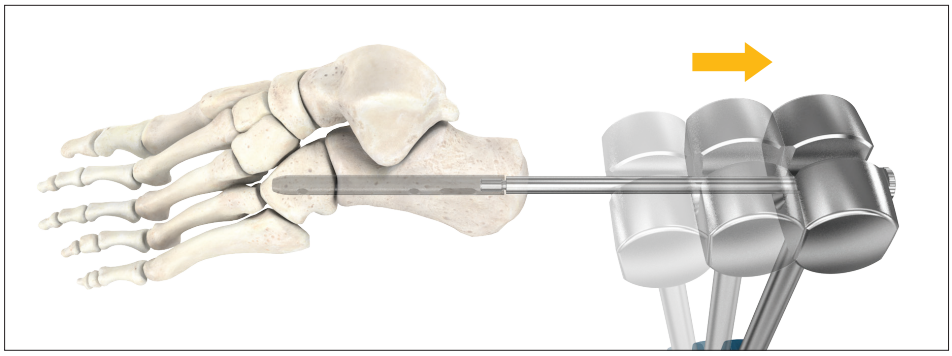

Nail removal

Notes

Notes

Notes

This document is intended solely for the use of healthcare professionals. A surgeon must always rely on his or her own professional clinical judgment when deciding whether to use a particular product when treating a particular patient. Stryker does not dispense medical advice and recommends that surgeons be trained in the use of any particular product before using it in surgery.

The information presented is intended to demonstrate a Stryker product. A surgeon must always refer to the package insert, product label and/or instructions for use, including the instructions for cleaning and sterilization (if applicable), before using any Stryker product. Products may not be available in all markets because product availability is subject to the regulatory and/or medical practices in individual markets. Please contact your Stryker representative if you have questions about the availability of Stryker products in your area.

Stryker Corporation or its affiliates own, use, or have applied for the following trademarks or service marks: Stryker, T2, VariAx. All other trademarks are trademarks of their respective owners or holders.

This document is only approved for use in the USA.

Content-ID: T2-ST-32, 07-2019
Copyright © 2019 Stryker

Manufacturer:

Stryker GmbH
Bohnackerweg 1
2545 Selzach
Switzerland

stryker.com